

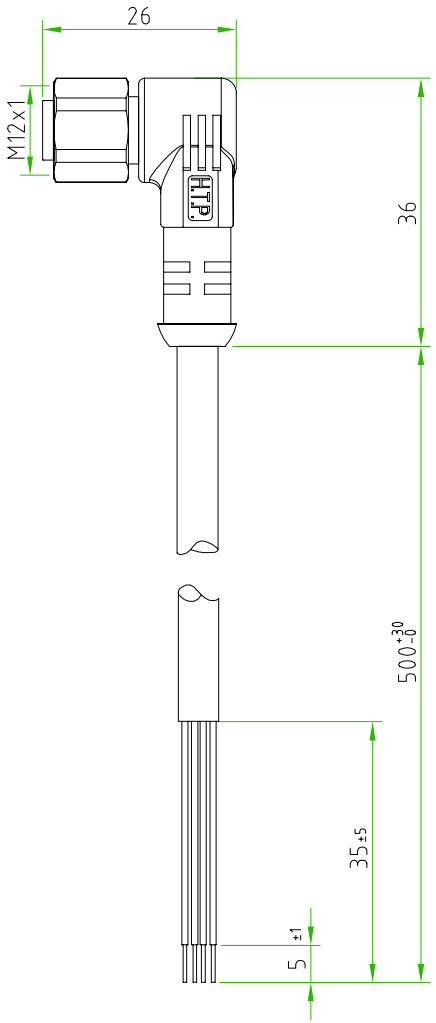

CONNECTOR FEATURES	CONNECTOR TYPE	M12 90°
	CONTACT TYPE	FEMALE 4POLES
	CABLE LENGHT	500mm
	PROTECTION CLASS	IP69K
	STRIPPING	35mm STANDARD
	PEELING AND TINNING	5mm STANDARD
	NUMBER OF CONTACTS CONNECTED	N°4
	CONNECTOR WITH H.T.P.LOGO	
	⚠ HEXAGONAL NUT MATERIAL:STAINLESS STEEL (AISI304)	
CABLE FEATURES	H.T.P.CABLE CODE	D
	NUMBER OF CONDUCTORS	4
	CONDUCTOR SECTION	0.34mm²
	CABLE MATERIAL	PUR
	COATING COLOUR	BLACK
	CONDUCTOR INSULATION MATERIAL	PUR

TOLLERANZE ±0.3	DISEGNATORE LORENZO CIMMINO	DATA 01.08.12	SCALA 1:1		DISEGNO N.
U.d.M / ANGOLO	CONTROLLATO				
DESCRIZIONE M12 FEMALE 90° 4 POLES,WITH CABLE PUR/PP 4X0.34mm² BLACK L=0.5m. CONNECTOR WITH STAINLESS STEEL NUT AISI304		TIPO M12			MATERIALE
High Tech Products HTP H.T.P. HIGH TECH PRODUCTS		CODICE 12FA4D0E-INOX			