

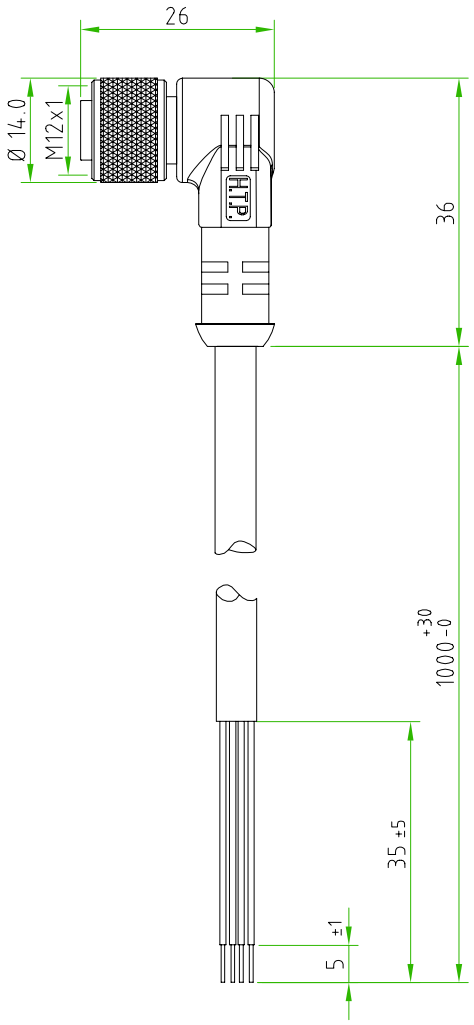

CONNECTOR FEATURES	CONNECTOR TYPE	M12 90°
	CONTACT TYPE	FEMALE 4POLES
	CABLE LENGHT	1000mm
	PROTECTION CLASS	IP69K
	STRIPPING	35mm STANDARD
	PEELING AND TINNING	5mm STANDARD
	NUMBER OF CONTACTS CONNECTED	N°4
	CONNECTOR WITH H.T.P.LOGO	
CABLE FEATURES	H.T.P.CABLE CODE	A
	NUMBER OF CONDUCTORS	4
	CONDUCTOR SECTION	0.25mm²
	CABLE MATERIAL	PVC CEI2022
	COATING COLOUR	BLACK
	CONDUCTOR INSULATION MATERIAL	PVC

TOLLERANZE ±0.3	DISEGNATORE LORENZO CIMMINO	DATA 12.04.12	SCALA 1:1		DISEGNO N.
U.d.M / ANGOLO	CONTROLLATO				
DESCRIZIONE: M12 FEMALE 90° 4 POLES,WITH CABLE PVC/PVC CEI2022 BLACK 4X0.25mm² 1m		TIPO: M12			MATERIALE
High Tech Products HTP H.T.P. HIGH TECH PRODUCTS		CODICE: 12FA4A1Z			