

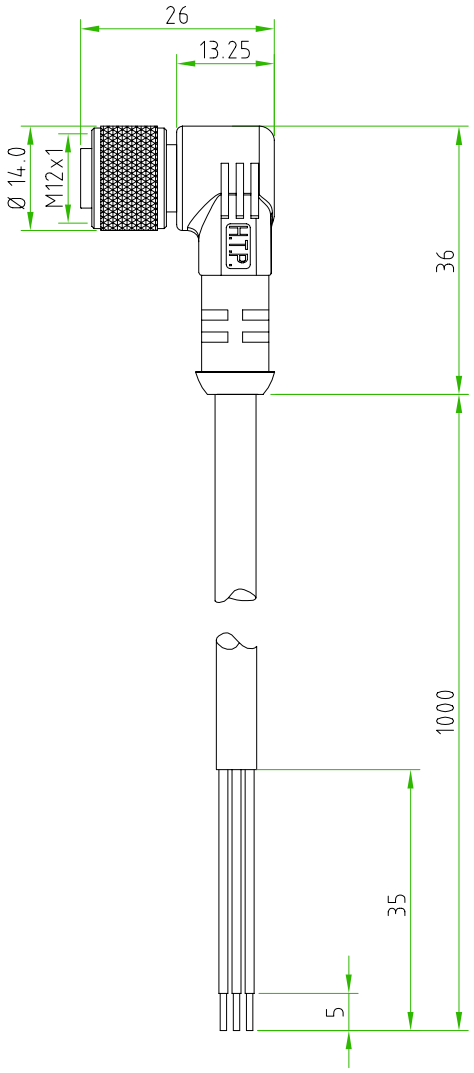

CONNECTOR FEATURES	CONNECTOR TYPE	M12 90°
	CONTACT TYPE	FEMALE 3POLES
	CABLE LENGHT	1000mm
	PROTECTION CLASS	IP69K
	STRIPPING	35mm STANDARD
	PEELING AND TINNING	5mm STANDARD
	NUMBER OF CONTACTS CONNECTED	N°3
	CONNECTOR WITH H.T.P.LOGO	
CABLE FEATURES	H.T.P.CABLE CODE	B
	NUMBER OF CONDUCTORS	N°3
	CONDUCTOR SECTION	0.34mm²
	CABLE MATERIAL	PVC CEI2022
	COATING COLOUR	BLACK
	CONDUCTOR INSULATION MATERIAL	PVC

TOLLERANZE		DISEGNATORE LORENZO CIMMINO	DATA 20.01.12	SCALA 1:1	DISEGNO N.
U.d.M	ANGOLO	CONTROLLATO			
DESCRIZIONE M12 FEMALE 90° 3 POLES,WITH CABLE PVC/PVC CEI2022,3X0.34mm²,BLACK,L=1m			TIPO M12		MATERIALE
High Tech Products HTP H.T.P. HIGH TECH PRODUCTS			CODICE 12FA3B1Z		