

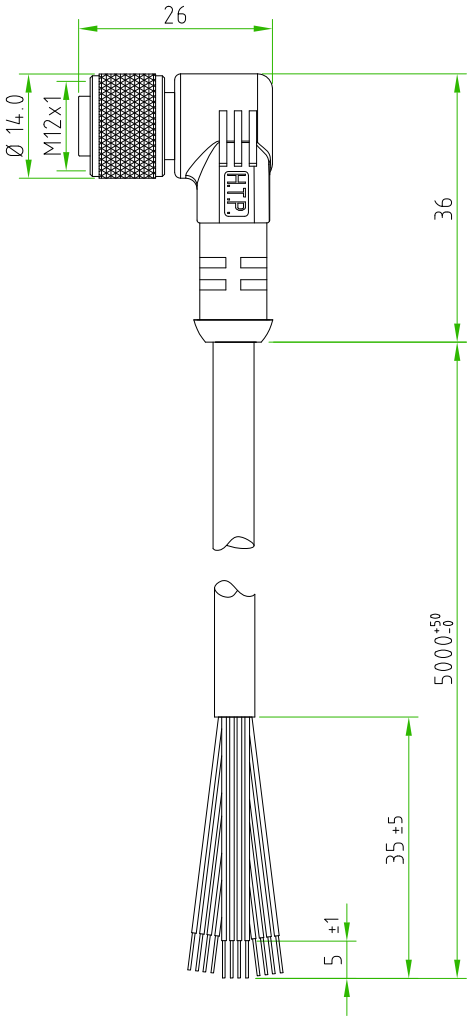

CONNECTOR FEATURES	CONNECTOR TYPE	M12 90°
	CONTACT TYPE	FEMALE 12POLES
	CABLE LENGHT	5000mm
	PROTECTION CLASS	IP69K
	STRIPPING	35mm STANDARD
	PEELING AND TINNING	5mm STANDARD
	NUMBER OF CONTACTS CONNECTED	N°12
	RATED VOLTAGE	30V AC/DC
	RATED CURRENT	1,5 A
	CONNECTOR WITH H.T.P.LOGO	
CABLE FEATURES	H.T.P.CABLE CODE	CAVO K-12
	NUMBER OF CONDUCTORS	N°12
	CONDUCTOR SECTION	0.14mm²
	CABLE MATERIAL	PVC CEI2022
	COATING COLOUR	BLACK
	CONDUCTOR INSULATION MATERIAL	PVC

TOLLERANZE ±0.3	DISEGNATORE LORENZO CIMMINO	DATA 10.04.12	SCALA 1:1		DISEGNO N.	
U.d.M	ANGOLO	CONTROLLATO				
DESCRIZIONE M12 FEMALE 90° 12 POLES, WITH CABLE PVC/PVC CEI2022 12X0.14mm² BLACK 5m CONNECTOR WITH H.T.P.LOGO			TIPO M12		MATERIALE	
H.T.P. HIGH TECH PRODUCTS			CODICE 12FA12K5Z			