R1: Resistance 220Ω 1/4W

R2: Resistance 330Ω 1/4W

R3: Resistance 330Ω 1/4W

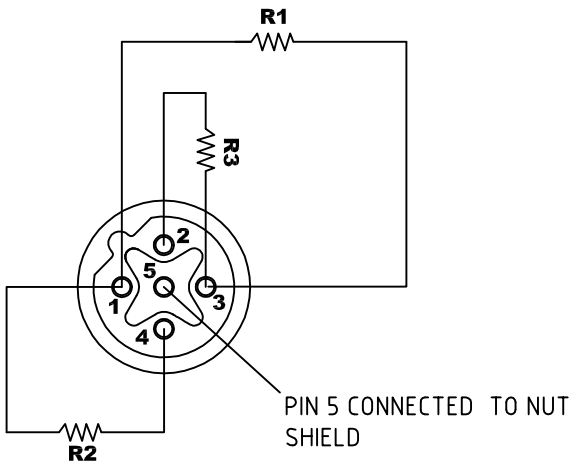

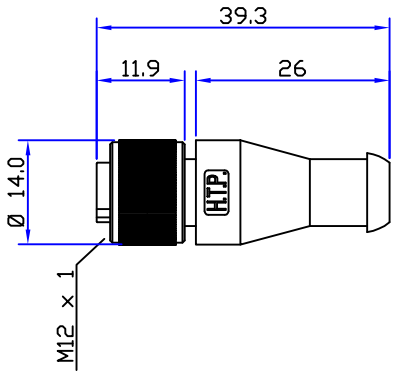

FEMALE FACE

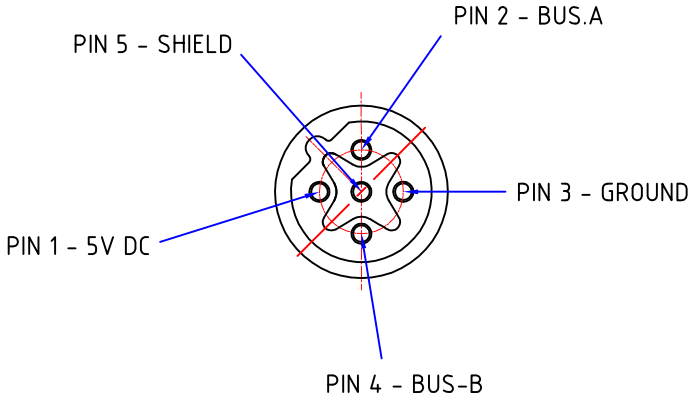

CONNECTOR FEATURES	
TYPE CONCTACT	FEMALE
NUMBER OF CONTACT	5 POLES
HOUSING	NYLON6 + 30%GLASS FIBRE
TYPE HOUSING	180°
COLOUR HOUSING	BLACK
PRESS CABLE SCREW	-
RATED VOLTAGE:	125V AC/DC
RATED CURRENT:	2A
CONTACT MATERIAL	PHOSPHOROUS BRONZE
CONTACT SURFACE MATERIAL:	NICKEL +0.45µm
COUPLING NUT MATERIAL:	Zn Al/Ni
O-RING:	YES
PROTECTION CLASS:	IP69K
TEMPERATURE RANGE:	-25°C TO +70°C
TOTAL SHIELDED - PROFIBUS	

TOLLERANZE		DISEGNATORE MARCO MAZZOLINI	DATA 14.01.09	SCALA 1:1	PESO
U.d.M	ANGOLO	CONTROLLATO			
DESCRIZIONE: M12 FEMALE TERMINATORS FOR PROFIBUS 5 POLES TOTAL SHIELDED			TIPO: M12		MATERIALE
High Tech Products HTP H.T.P. HIGH TECH PRODUCTS			CODICE: B-12FJ5000-TERM		