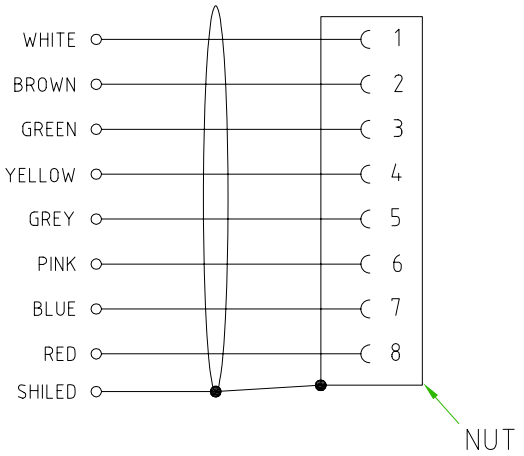

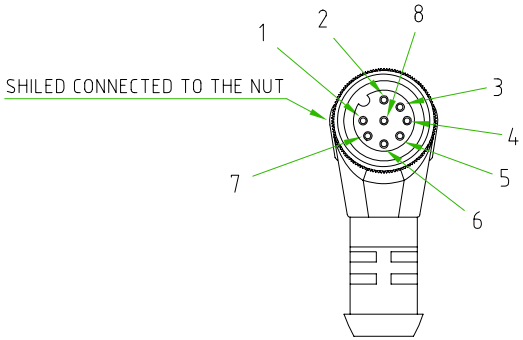

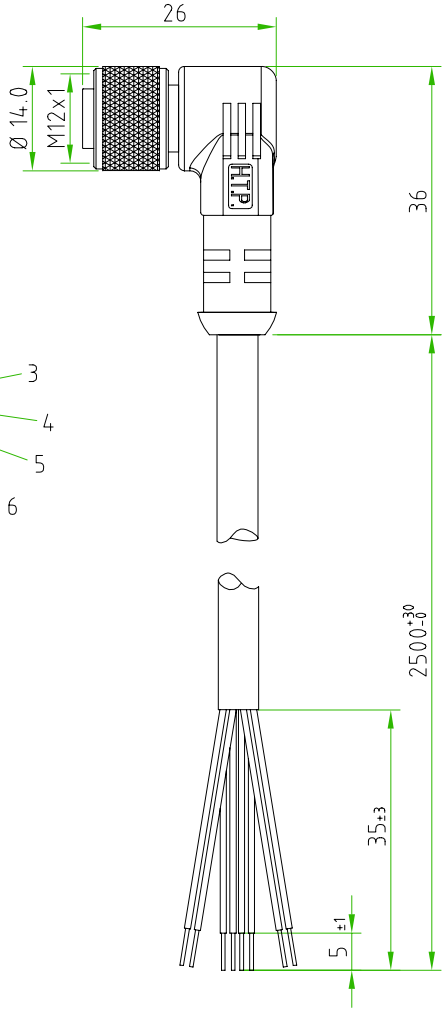

CONNECTOR FEATURES	CONNECTOR TYPE	M12 90°
	CONTACT TYPE	FEMALE 8POLES
	CABLE LENGHT	2500mm
	PROTECTION CLASS	IP69K
	STRIPPING	35mm STANDARD
	PEELING AND TINNING	5mm STANDARD
	NUMBER OF CONTACTS CONNECTED	N°8
	RATED VOLTAGE	30V AC/DC
	RATED CURRENT	2A
	TOTALLY SHILEDED CONNECTOR (SHIELD CONNECTED TO THE NUT)	
	CONNECTOR WITH H.T.P.LOGO	
CABLE FEATURES	H.T.P.CABLE CODE	U "K6-IS"
	NUMBER OF CONDUCTORS	N°8
	CONDUCTOR SECTION	0,25mm²
	CABLE MATERIAL	PUR Li9YC11Y
	COATING COLOUR	BLACK
	CONDUCTOR INSULATION MATERIAL	PP
	CABLE SHIELDED	
	THIS CABLE IS PROVIDED BY H.T.P.	
	THE CABLE IS HIGH FLEX "-K6" (CLASS 6).	

TOLLERANZE ±0.3	DISEGNATORE LORENZO CIMMINO	DATA 22.05.13	SCALA 1:1		DISEGNO N.
U.d.M / ANGOLO	CONTROLLATO				
DESCRIZIONE M12 FEMALE 90° 8 POLES,TOTALLY SHIELDED,WITH CABLE PUR/PP Li9YC11Y 8x0,25mm² BLACK SHIELDED HIGH FLEX 2,5m CONNECTOR WITH H.T.P.LOGO		TIPO M12			MATERIALE
High Tech Products HTP H.T.P. HIGH TECH PRODUCTS		CODICE 12FV8U2E-K6-IS			