Rev.	Modify	Date	Signed	Approved

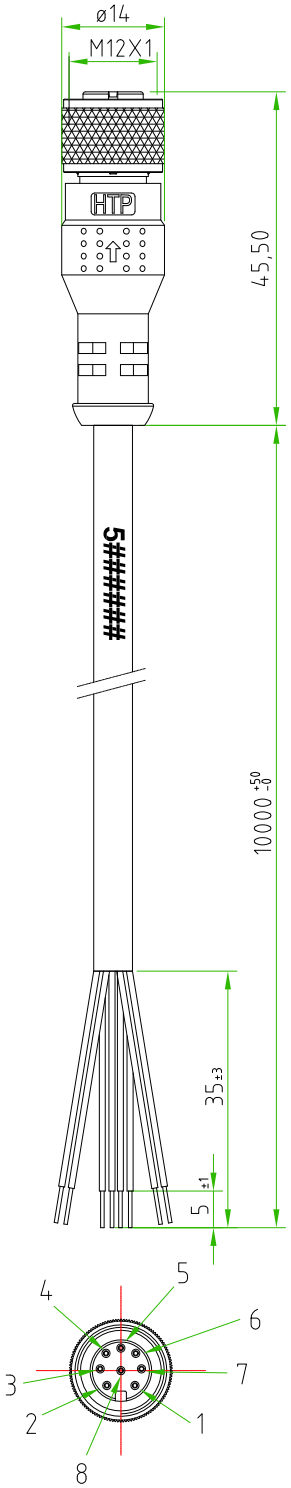

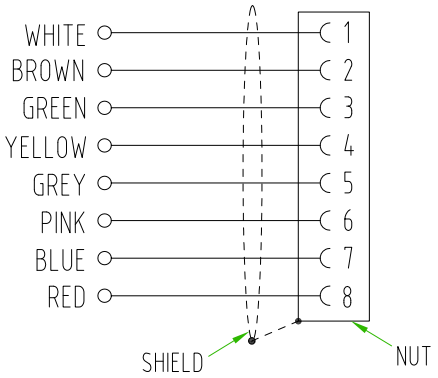

CONNECTOR FEATURES	PRODUCT TYPE	M12 CIRCULAR CONNECTOR WITH MOULDED CABLE
	CONNECTOR TYPE	STRAIGHT 180°
	CONTACTS TYPE	FEMALE 8POLES
	NUMBER OF CONTACTS CONNECTED	N°8
	PROTECTION CLASS	IP69K
	RATED VOLTAGE	30V AC/DC
	RATED CURRENT	2A
	TOTALLY SHIELDED CONNECTOR (SHIELD CONNECTED TO THE NUT)	
	CONNECTOR WITH H.T.P.LOGO	
CABLE FEATURES	H.T.P.CABLE CODE	CAVO Q-8
	NUMBER OF CONDUCTORS	N°8
	CONDUCTORS SECTION	0,25mm²
	CABLE MATERIAL	PVC CEI2022
	COATING COLOUR	GREY RAL7032
	CONDUCTORS INSULATION MATERIAL	PVC
	CABLE LENGTH	10000mm
	STRIPPING	35mm STANDARD
	PEELING AND TINNING	5mm STANDARD
	CABLE SHIELDED	
	ON THE CABLE,NEAR THE CONNECTOR HEAD,MUST BE SILK PRINTED THE H.T.P. PRODUCTION DATE CODE 5######	

CUSTOMER APPROVAL	
SIGNATURE	DATE
PLEASE SIGN AND RETURN	

Designer	SUGLIANI R.	Date 2020-02-13	Tollerance ±0.3	Units: mm	Series M12	Drawing n. 1-1
Approved	CIMMINO L.	Date 2020-02-13	Scale 1:1	Size: A4	Customer code:	

A4

DESCRIPTION

CIRCULAR CONNECTOR M12,FEMALE,STRAIGHT 180°,8POLES,TOTALLY SHIELDED, WITH CABLE PVC/PVC CEI2022,8x0.25mm², GREY COLOUR,SHIELDED,L=10m. CONNECTOR WITH H.T.P.LOGO

H.T.P.PART NUMBER

12FJ8Q10

H.T.P. High Tech Products S.R.L. Via Lesina,45 -24030- Brembate di Sopra (Bg) - ITALY Phone:+39.035692509 Fax:+39.035203291 E-mail: info@webhtp.eu Web: http://www.webhtp.eu/

ALL RIGHTS ARE RESERVED.