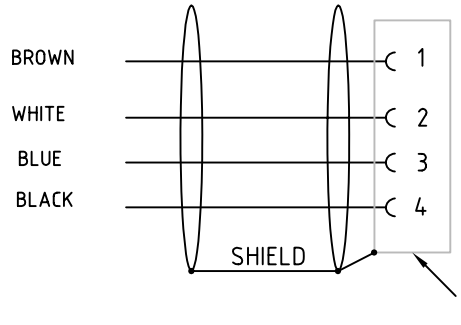

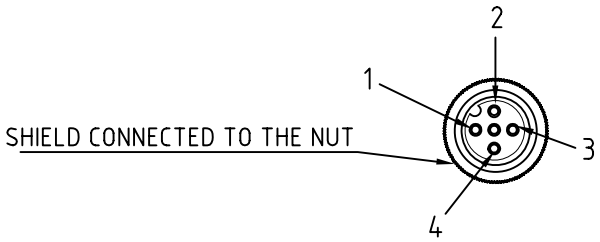

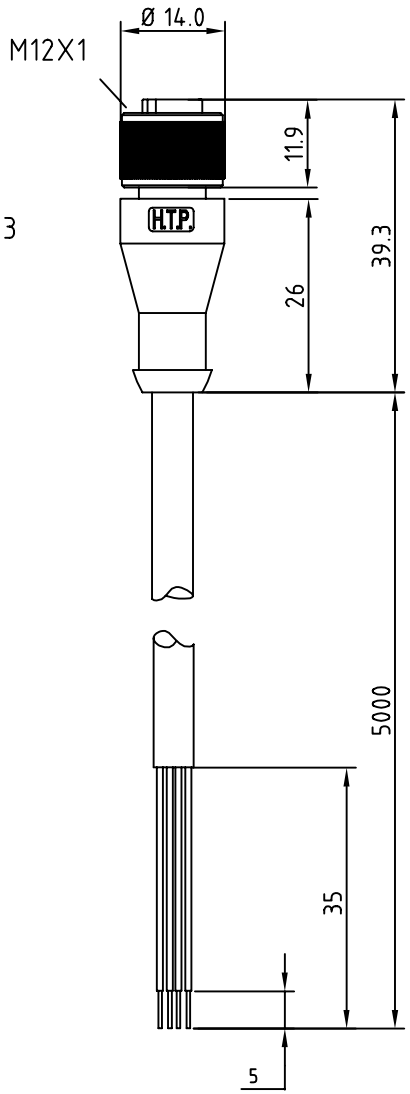

CONNECTOR FEATURES	CONNECTOR TYPE	M12
	CONTACT TYPE	FEMALE 4POLES
	CABLE LENGHT	5000mm
	PROTECTION CLASS	IP69K
	STRIPPING	35mm STANDARD
	PEELING	5mm STANDARD
	NUMBER OF CONTACTS CONNECTED	N°4
	CONNECTOR WITH H.T.P.LOGO	
	TOTALLY SHIELDED CONNECTOR (SHIELD CONNECTED TO THE NUT)	
CABLE FEATURES	H.T.P.CABLE CODE	Q
	NUMBER OF CONDUCTORS	N°4
	CONDUCTOR SECTION	0.25mm²
	CABLE MATERIAL	PVC CEI2022
	COATING COLOUR	GREY
	CONDUCTOR INSULATION MATERIAL	PVC
	CABLE SHIELDED	

TOLLERANZE		DISEGNATORE LORENZO CIMMINO	DATA 18.12.09	SCALA 1:1	DISEGNO N.
U.d.M	ANGOLO	CONTROLLATO			
DESCRIZIONE M12 FEMALE 180° 4 POLES,TOTALLY SHIELDED,WITH CABLE PVC/PVC,CEI2022,SHIELDED,4X0,25mm²,GREY,L=5m			TIPO M12		MATERIALE
H.T.P. HIGH TECH PRODUCTS			CODICE 12FJ4Q5Z		