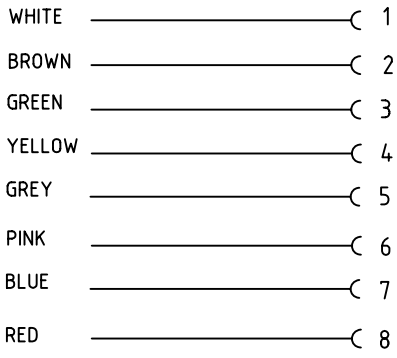

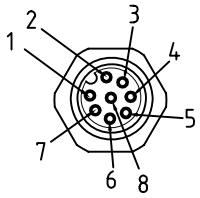

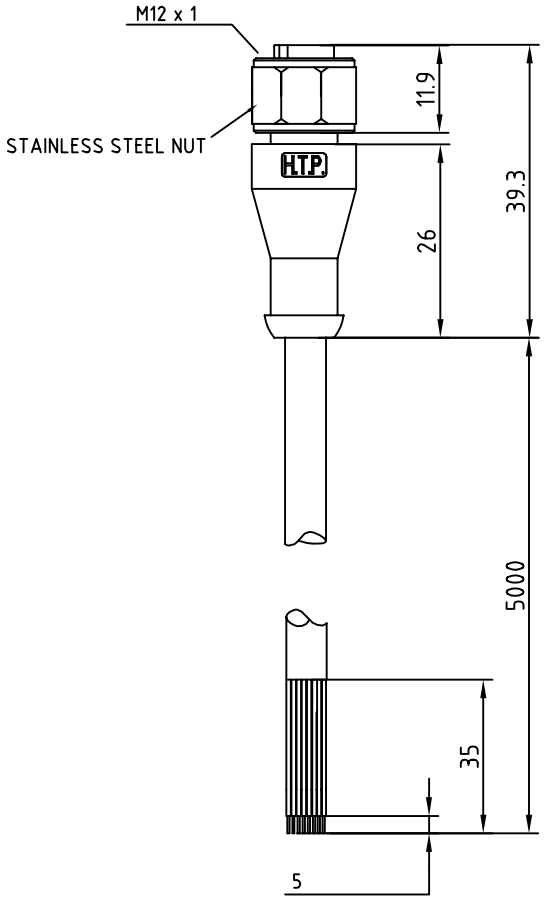

CONNECTOR FEATURES	TYPE CONCTACT	8POLES
	CABLE LENGHT	5000mm
	STRIPPING	35mm
	PEELING	5mm
	STAINLESS STEEL NUT	
CABLE FEATURES	H.T.P. CABLE CODE	C
	NUMBER OF CONDUCTORS	n°8
	CONDUCTOR SECTION	0.25mm^2
	CABLE MATERIAL	PUR
	COATING COLOUR	BLACK
	CONDUCTOR ISULATION MATERIAL	PUR

TOLLERANZE	DISEGNATORE LORENZO CIMMINO	DATA 17-02-08	SCALA 1:1		DISEGNO 1/1
U.d.M / ANGOLO	CONTROLLATO				
DESCRIZIONE: M12 MALE,180°,8 POLES,WITH STAINLESS STEEL NUT WITH CABLE 8X0.25 PUR/PUR BLACK ,L=5m		TIPO: M12			MATERIALE
High Tech Products HTP H.T.P. HIGH TECH PRODUCTS		CODICE: 12FD8C5Z-INOX			