BROWN — 1
WHITE — 2
BLUE — 3
BLACK — 4

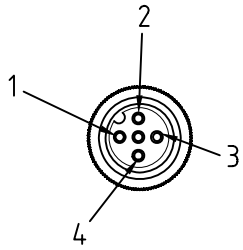

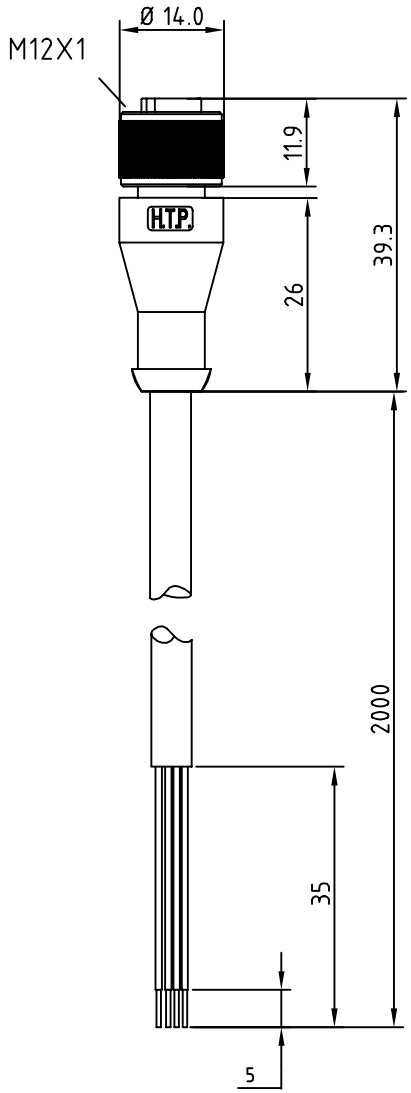

CONNECTOR FEATURES	TYPE CONTACT	FEMALE 4POLES
	CABLE LENGHT	2000mm
	PROTECTION CLASS	IP69K
	STRIPPING	35mm STANDARD
	PEELING	5mm STANDARD
	NUMBER OF CONTACTS CONNECTED	N°4
CABLE FEATURES	H.T.P.CABLE CODE	N
	NUMBER OF CONDUCTORS	n°4
	CONDUCTOR SECTION	0.25mm²
	CABLE MATERIAL	PVC CEI2022
	COATING COLOUR	GREY
	CONDUCTOR INSULATION MATERIAL	PVC

TOLLERANZE	DISEGNATORE LORENZO CIMMINO	DATA 25.03.09	SCALA 1:1		DISEGNO N.
U.d.M / ANGOLO	CONTROLLATO				
DESCRIZIONE: M12 CONNECTOR FEMALE 180°,4POLES,WITH CABLE PVC/PVC, 4X0,25mm²,CEI2022,GREY,LENGHT 2m		TIPO: M12			MATERIALE
H.T.P. HIGH TECH PRODUCTS		CODICE: 12FD4N2Z			