

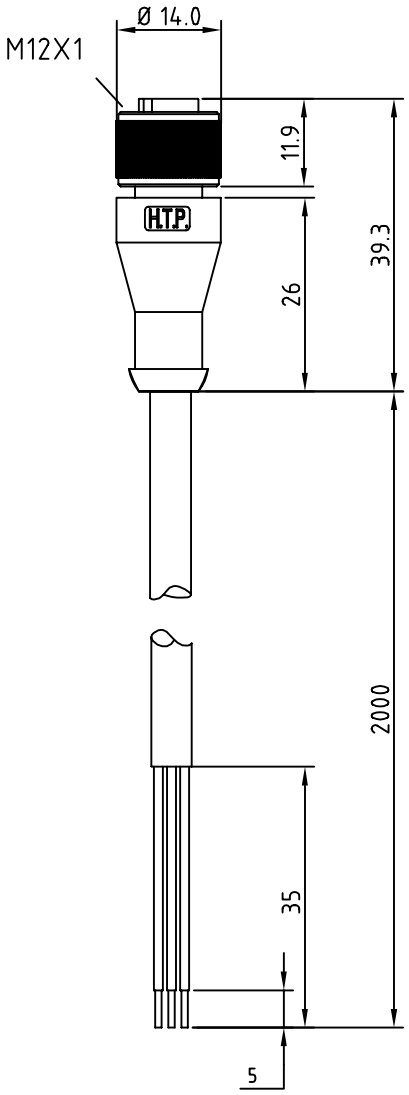

CONNECTOR FEATURES	CONNECTOR TYPE	M12
	CONTACT TYPE	FEMALE 3POLES
	CABLE LENGHT	2000mm
	PROTECTION CLASS	IP69K
	STRIPPING	35mm STANDARD
	PEELING	5mm STANDARD
	NUMBER OF CONTACTS CONNECTED	N°3
	CONNECTOR WITH H.T.P.LOGO	
CABLE FEATURES	H.T.P.CABLE CODE	61"-IS"
	NUMBER OF CONDUCTORS	N°3
	CONDUCTOR SECTION	0.75mm^2
	CABLE MATERIAL	PVC CEI2022IIOR
	COATING COLOUR	BLACK
	CONDUCTOR INSULATION MATERIAL	PVC
	THIS CABLE IS PROVIDED BY H.T.P.	

TOLLERANZE		DISEGNATORE LORENZO CIMMINO	DATA 21.01.10	SCALA 1:1	DISEGNO N.
U.d.M	ANGOLO	CONTROLLATO			
DESCRIZIONE: M12 FEMALE 180° 3 POLES,WITH CABLE PVC/PVC,CEI2022IIOR, BLACK,3X0.75mm^2,L=2m.THIS CABLE IS PROVIDED BY H.T.P.			TIPO: M12		MATERIALE
H.T.P. HIGH TECH PRODUCTS			CODICE: 12FD3612Z-IS		