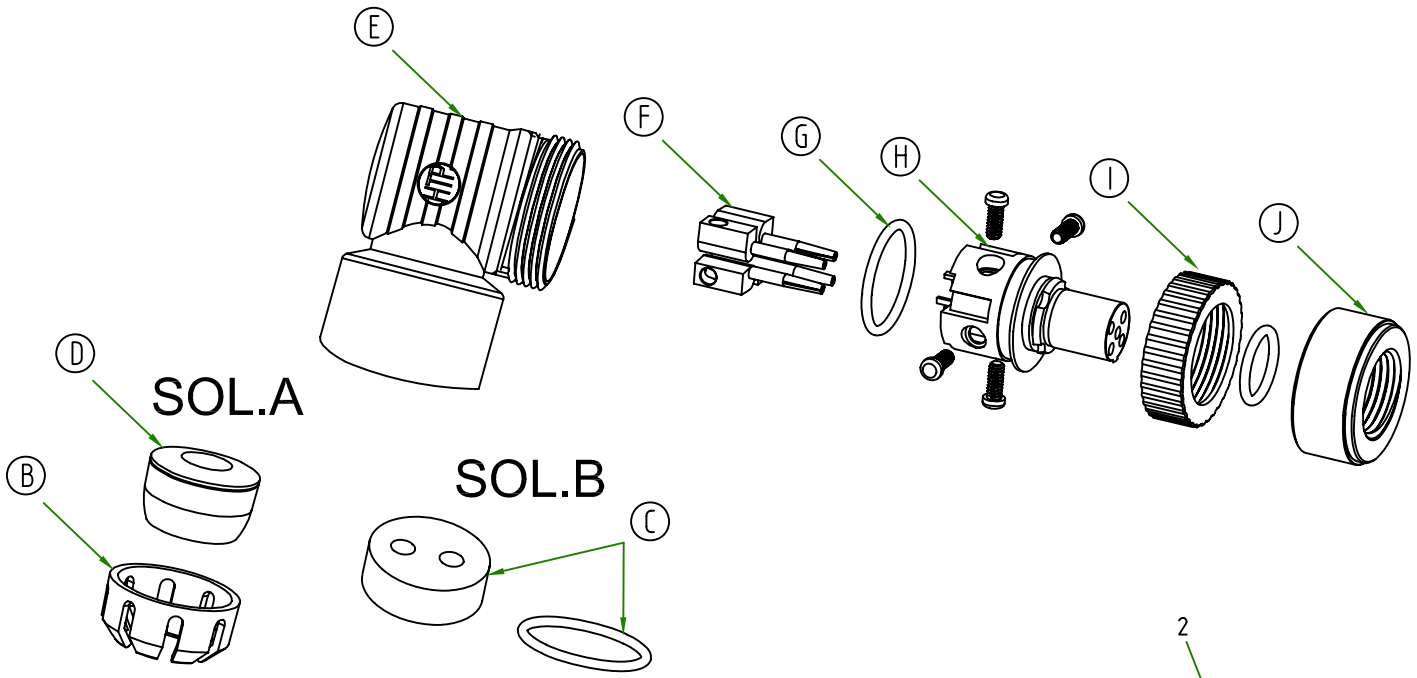

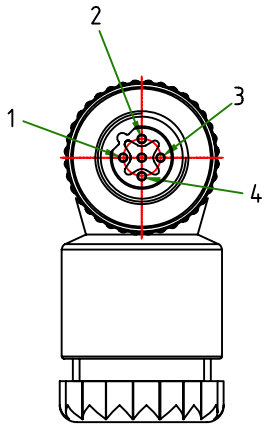

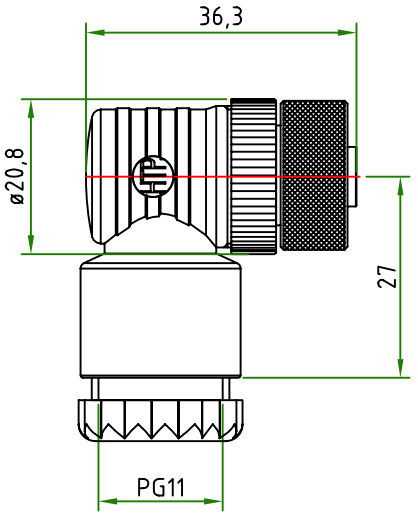

A	PRESS CABLE SREW
B	LAMELLAE PRESS-CABLE SEAL
C	GASKET WITH DOUBLE EXIT + METAL WASHER
D	N°2 GASKETS PRESS-CABLE SEAL PG9 AND PG11
E	HOUSING BLACK
F	SCREW CONTACT GOLD PLATED
G	O-RING
H	INTERNAL CORE M12 B-CODED
I	PLASTIC NUT FOR HOUSING
J	M12 NUT ZN Al/Ni

CONNECTOR FEATURES		
	TYPE CONCTACT	FEMALE B-CODED
	NUMBER OF CONTACTS	4POLES
	RATED VOLTAGE	250V
	RATED CURRENT	4A
	TYPE HOUSING	ANGLED 90°
	PRESS CABLE SCREW	PG11
	HOUSING COLOUR	BLACK
	HOUSING MATERIAL	PA66+15%FIBRE GLASS
	NUT MATERIAL	Zn Al/Ni
	CONTACT MATERIAL	PHOSPHOROUS BRONZE
	CONTACT SURFACE MATERIAL	NICKEL+0.45µm AU GOLD PLATED
	PROTECTION CLASS	IP67
	HOUSING WITH H.T.P.LOGO	

TOLLERANZE		DISEGNATORE LORENZO CIMMINO	DATA 21.12.11	SCALA 1:1	DISEGNO N.
U.d.M	ANGOLO	CONTROLLATO			
DESCRIZIONE: M12 FEMALE 90° 4 POLES B-CODED TO CABLE,PG9/PG11 UNIFIED,WITH H.T.P.LOGO.			TIPO: M12		MATERIALE
HTP High Tech Products — H.T.P. HIGH TECH PRODUCTS			CODICE: B-12FU4000		