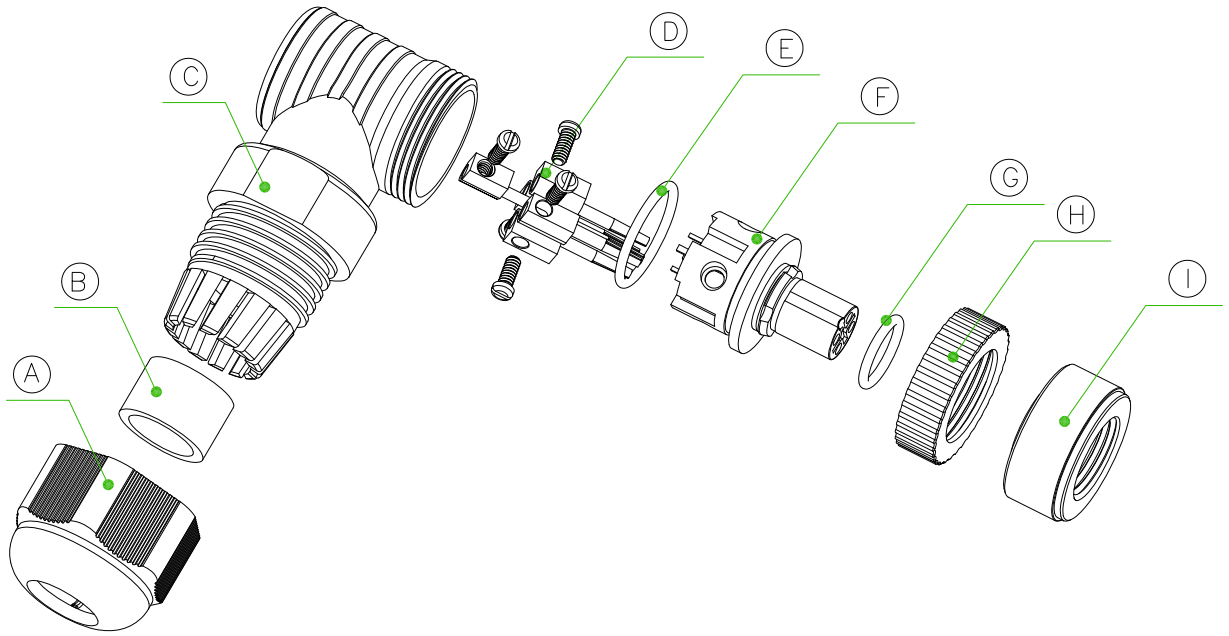

CONNECTOR FEATURES	
PRODUCT TYPE	M12 FIELD ATTACHABLE B-CODED
CONTACT TYPE	FEMALE
NUMBER OF CONTACTS	5POLES
HOUSING MATERIAL	PA66
HOUSING TYPE	90°
HOUSING COLOUR	BLACK
RATED VOLTAGE	60V AC/DC
EXIT CABLE	FROM ø4mm TO ø9mm
RATED CURRENT	4A
COUPLING NUT MATERIAL	BRASS+NICKEL PLATED (CuZnNi)
O"RING	NBR
PROTECTION CLASS	IP67
CONNECTOR WITH H.T.P.LOGO	

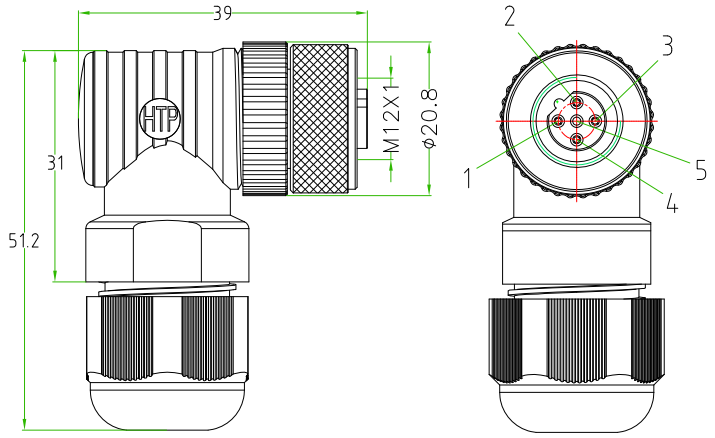

A	PRESS CABLE SREW
B	GASKET PRESS-CABLE SEAL
C	HOUSING BLACK
D	SCREW CONTACT GOLD PLATED
E	O-RING
F	INTERNAL CORE M12 B-CODED
G	O-RING
H	PLASTIC NUT FOR HOUSING
I	M12 NUT CuZnNi

TOLLERANZE ±0.2		DISEGNATORE ROBERTO SUGLIANI	DATA 11.07.2016	SCALA 1:1		RIF.CLIENTE
U.d.M	ANGOLO	CONTROLLATO				
DESCRIZIONE M12 CONNECTOR FEMALE 90°,5POLES,FIELD ATTACHABLE,B-CODED,EXIT CABLE FROM ø4mm TO ø9mm. CONNECTOR WITH H.T.P.LOGO			TIPO M12			MATERIALE
H.T.P. HIGH TECH PRODUCTS			CODICE B-12FB5000-SK			