

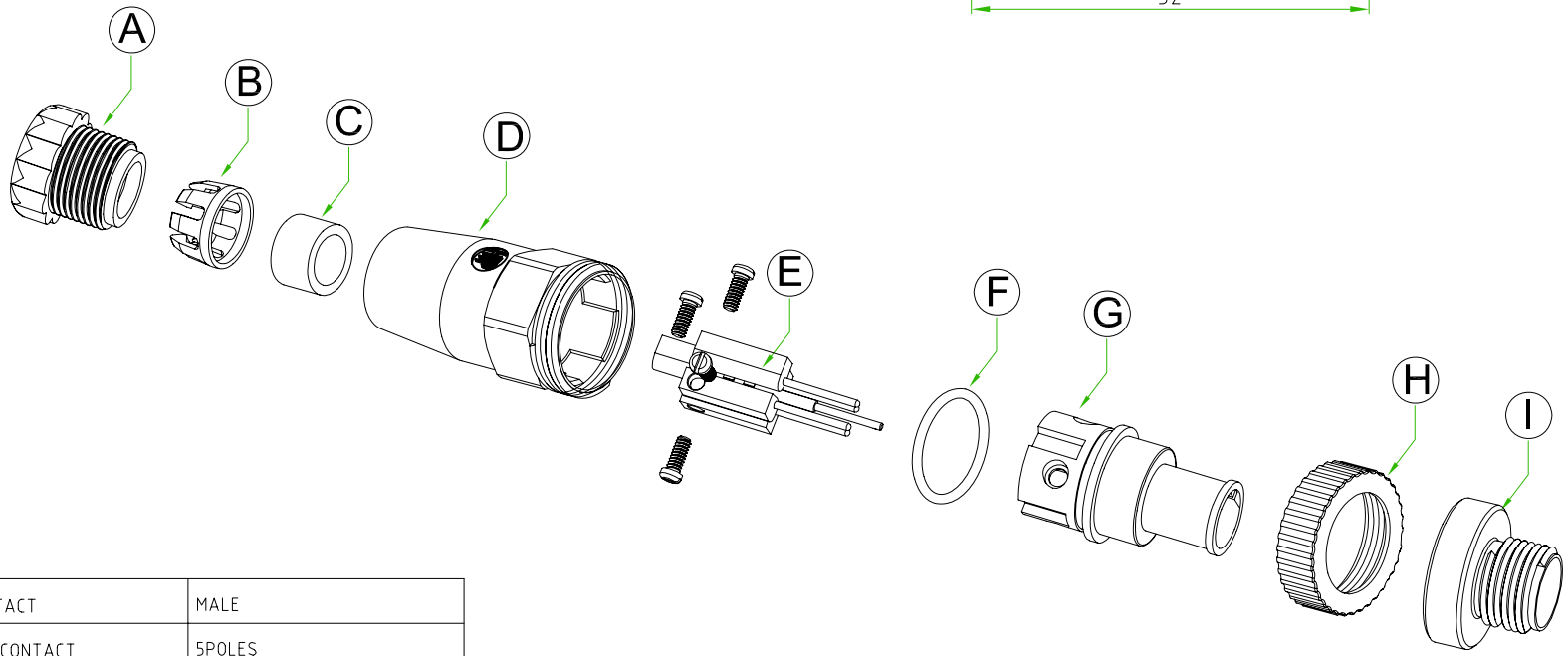

CONNECTOR FEATURES	
TYPE CONCTACT	MALE
NUMBER OF CONTACT	5POLES
HOUSING MATERIAL	PA66
TYPE HOUSING	180°
COLOUR HOUSING	TRANSPARENT
PRESS CABLE SCREW	PG7
RATED VOLTAGE:	60V AC/DC
RATED CURRENT:	4A
COUPLING NUT MATERIAL:	BRASS+NICKEL PLATED (CuZnNi)
O-RING:	NBR
PROTECTION CLASS:	IP67
CONNECTOR WITH H.T.P.LOGO	

A	PRESS CABLE SREW
B	LAMELLAE PRESS-CABLE SEAL
C	GASKET PRESS-CABLE SEAL
D	TRANSPARENT HOUSING
E	SCREW CONTACT GOLD PLATED
F	O-RING
G	INTERNAL CORE M12
H	PLASTIC NUT FOR HOUSING
I	M12 NUT CuZnNi

TOLLERANZE ±0.2		DISEGNATORE LORENZO CIMMINO	DATA 12.11.12	SCALA 1:1		PESO
U.d.M	ANGOLO	CONTROLLATO				
DESCRIZIONE M12 MALE TO CABLE 5POLES 180° TRANSPARENT PG7 WITH LOGO HTP			TIPO M12			MATERIALE
High Tech Products HTP H.T.P. HIGH TECH PRODUCTS			CODICE 12MZ5000			