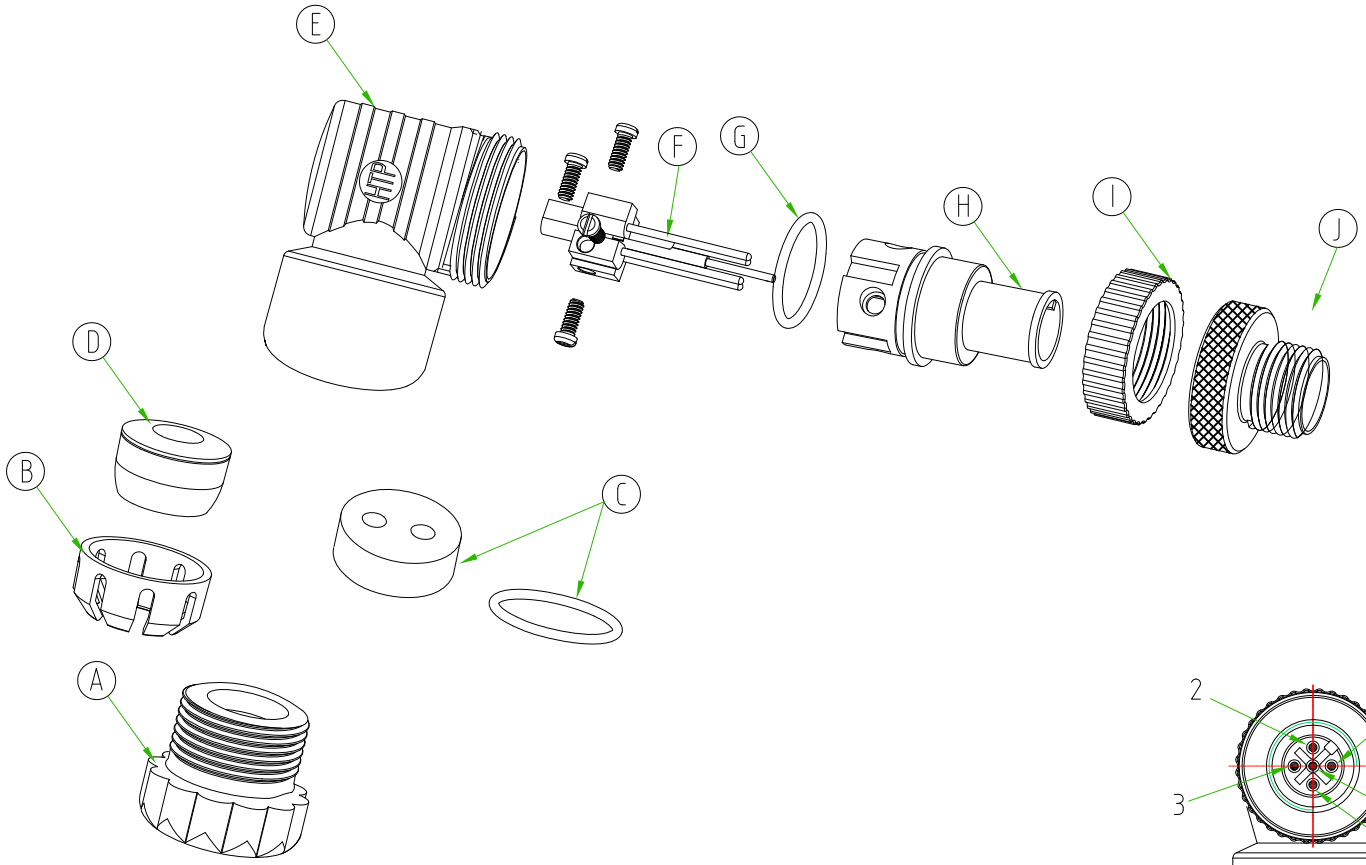

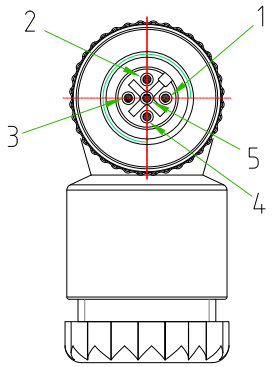

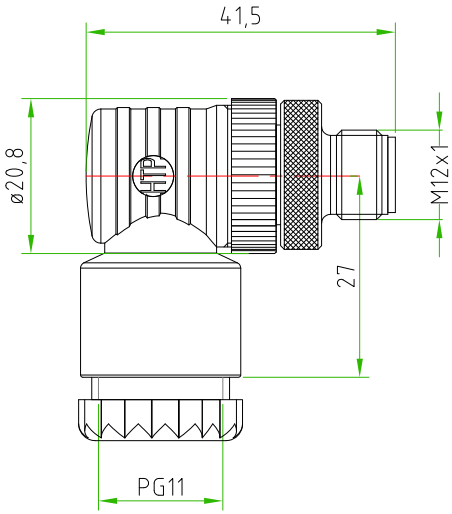

CONNECTOR FEATURES	
PRODUCT TYPE	M12 FIELD ATTACHABLE
CONTACT TYPE	MALE
NUMBER OF CONTACTS	5POLES
HOUSING MATERIAL	PA66+15% Fiber glass
HOUSING TYPE	90°
HOUSING COLOUR	BLACK
CABLE ENTRY	PG9/11 UNIFIED/DOUBLE ENTRY
RATED VOLTAGE	60V AC/DC
RATED CURRENT	4A
COUPLING NUT MATERIAL	Brass+nickel plated (CuZnNi)
O"RING	NBR
PROTECTION CLASS	IP67
CONNECTOR WITH H.T.P.LOGO	

A	PRESS CABLE SREW
B	LAMELLAE PRESS-CABLE SEAL
C	GASKET WITH DOUBLE EXIT + METAL WASHER
D	N°2 GASKETS PRESS-CABLE SEAL PG9 AND PG11
E	HOUSING BLACK
F	SCREW CONTACT GOLD PLATED
G	O-RING
H	INTERNAL CORE M12
I	PLASTIC NUT FOR HOUSING
J	M12 NUT ZN AI/Ni

TOLLERANZE ±0.2	DISEGNATORE LORENZO CIMMINO	DATA 05.03.13	SCALA 1:1		DISEGNO N.
U.d.M / ANGOLO	CONTROLLATO				
DESCRIZIONE: M12 MALE 90° 5 POLES FIELD ATTACHABLE,PG9/PG11 UNIFIED. CONNECTOR WITH H.T.P.LOGO.		TIPO: M12			MATERIALE
High Tech Products HTP H.T.P. HIGH TECH PRODUCTS		CODICE: 12MU5000			