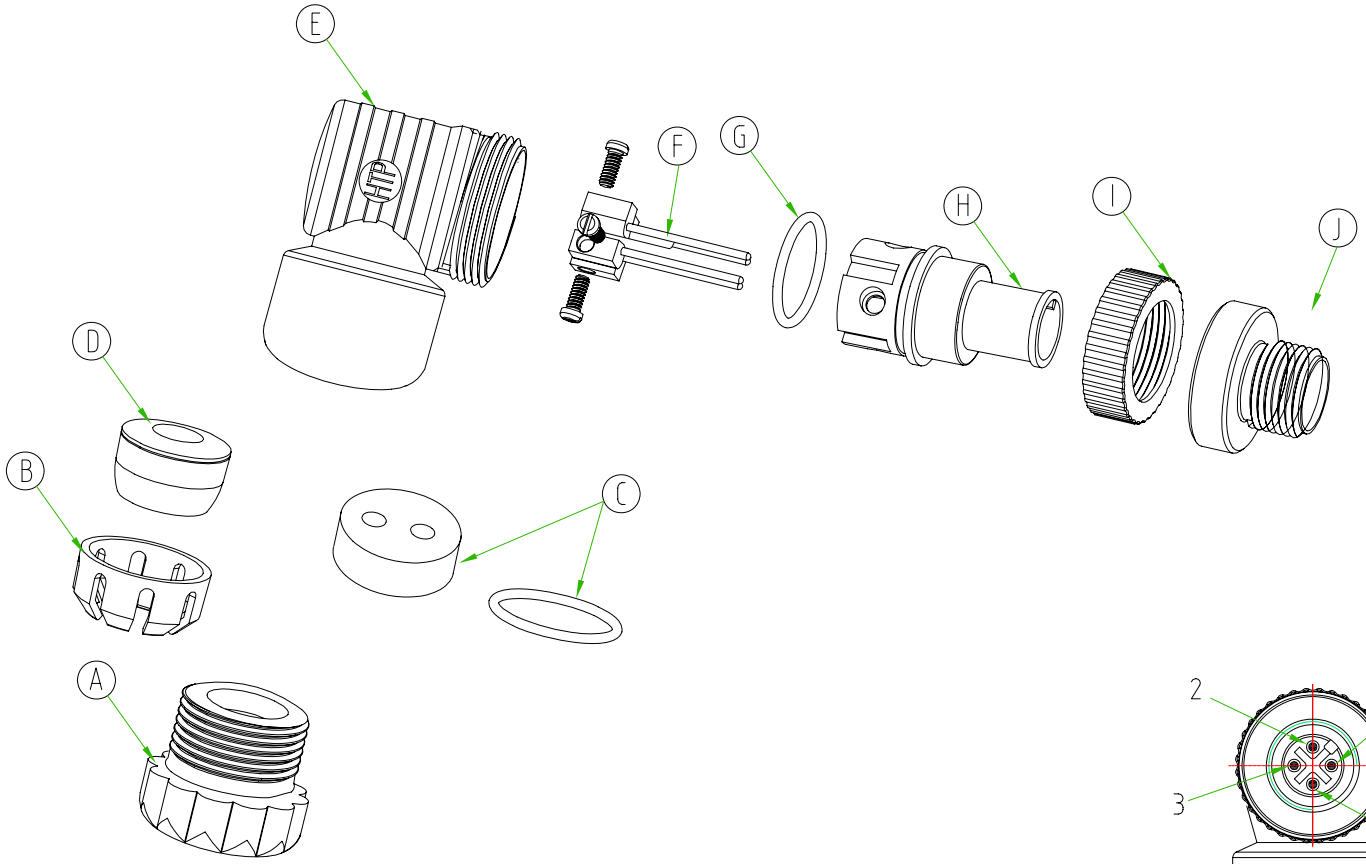

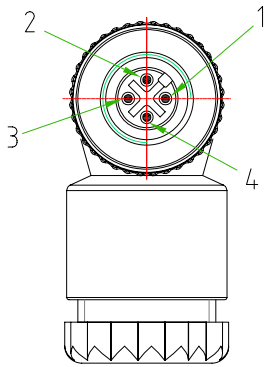

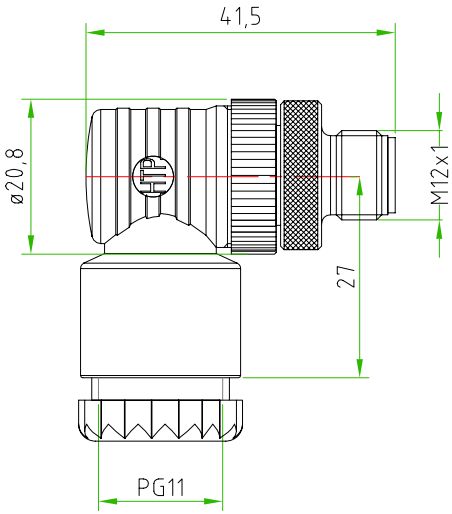

CONNECTOR FEATURES	
PRODUCT TYPE	M12 FIELD ATTACHABLE
CONTACT TYPE	MALE
NUMBER OF CONTACTS	4POLES
HOUSING MATERIAL	PA66+15% Fiber glass
HOUSING TYPE	90°
HOUSING COLOUR	BLACK
CABLE ENTRY	PG9/11 UNIFIED/DOUBLE ENTRY
RATED VOLTAGE	250V AC/DC
RATED CURRENT	4A
COUPLING NUT MATERIAL	Brass+nickel plated (CuZnNi)
O"RING	NBR
PROTECTION CLASS	IP67
CONNECTOR WITH H.T.P.LOGO	

A	PRESS CABLE SREW
B	LAMELLAE PRESS-CABLE SEAL
C	GASKET WITH DOUBLE EXIT + METAL WASHER
D	N°2 GASKETS PRESS-CABLE SEAL PG9 AND PG11
E	HOUSING BLACK
F	SCREW CONTACT GOLD PLATED
G	O-RING
H	INTERNAL CORE M12
I	PLASTIC NUT FOR HOUSING
J	M12 NUT ZN AI/Ni

TOLLERANZE ±0.2		DISEGNATORE LORENZO CIMMINO	DATA 05.03.13	SCALA 1:1	DISEGNO N.
U.d.M	ANGOLO	CONTROLLATO			
DESCRIZIONE M12 MALE 90° 4 POLES FIELD ATTACHABLE,PG9/PG11 UNIFIED. CONNECTOR WITH H.T.P.LOGO.			TIPO M12		MATERIALE
High Tech Products HTP H.T.P. HIGH TECH PRODUCTS			CODICE 12MU4000		