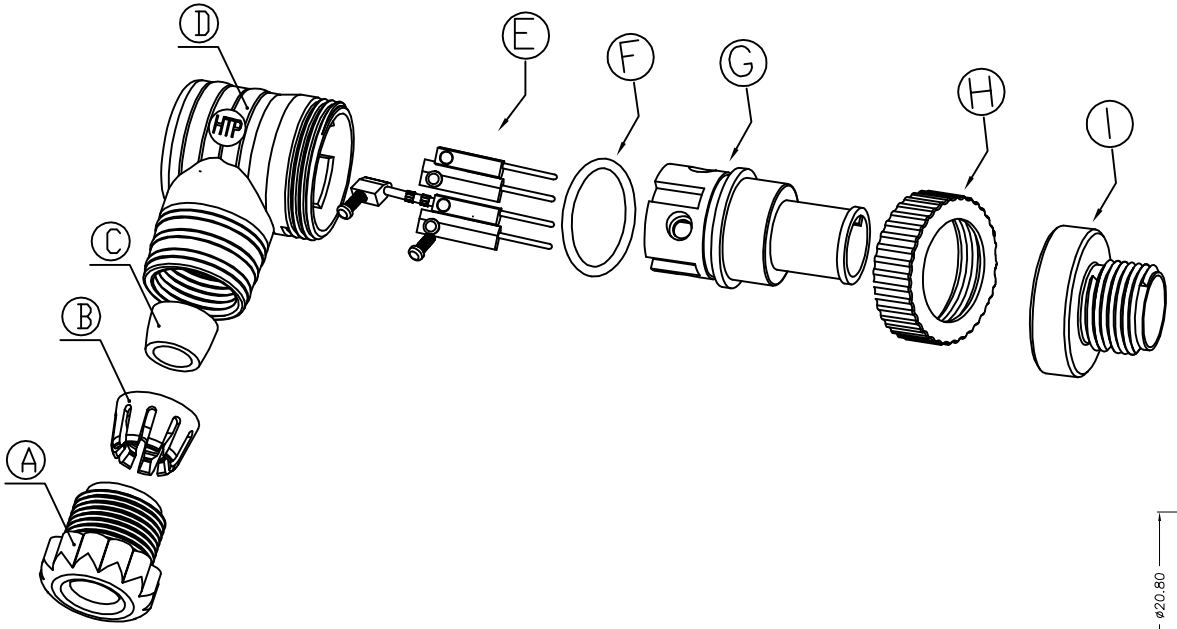

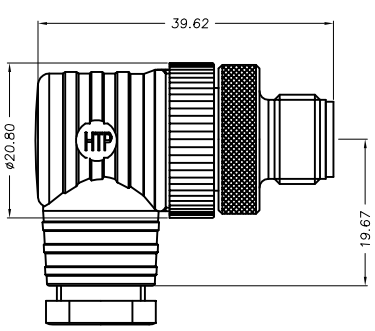

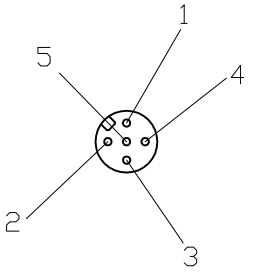

CONNECTOR FEATURES	
TYPE CONCTACT	MALE
NUMBER OF CONTACT	5 POLES
HOUSING	NYLON6 + 30%GLASS FIBRE
TYPE HOUSING	90°
COLOUR HOUSING	TRANSPARENT
PRESS CABLE SCREW	PG7
RATED VOLTAGE:	125V AC/DC
RATED CURRENT:	2A
CONTACT MATERIAL	PHOSPHOROUS BRONZE
CONTACT SURFACE MATERIAL:	NICKEL +0.45µm
COUPLING NUT MATERIAL:	Zn Al/Ni
O-RING:	NBR
PROTECTION CLASS:	IP67
TEMPERATURE RANGE:	-25°C TO +90°C

A	PRESS CABLE SREW
B	LAMELLAE PRESS-CABLE SEAL
C	GASKET PRESS-CABLE SEAL
D	HOUSING TRANSPARENT
E	SCREW CONTACT GOLD PLATED
F	O-RING
G	INTERNAL CORE M12
H	PLASTIC NUT FOR HOUSING
I	M12 NUT Zn Al/Ni

TOLLERANZE		DISEGNATORE MARCO MAZZOLINI	DATA 14.01.09	SCALA 1:1	PESO
U.d.M	ANGOLO	CONTROLLATO			
DESCRIZIONE: M12 MALE TO CABLE 5POLES 90° TRANSPARENT PG7 WITH LOGO HTP			TIPO: M12		MATERIALE
High Tech Products HTP H.T.P. HIGH TECH PRODUCTS			CODICE: 12MT5000		