

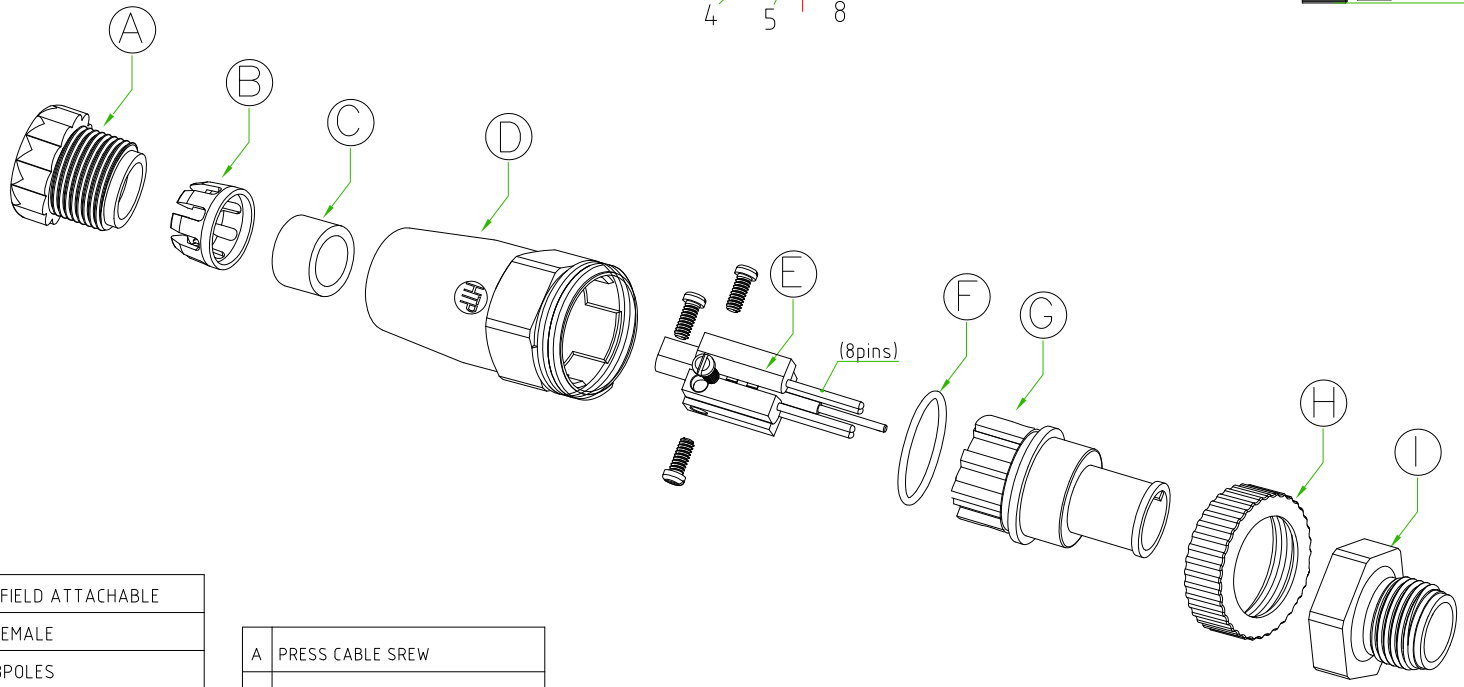

CONNECTOR FEATURES	PRODUCT TYPE	M12 A-CODED FIELD ATTACHABLE
	CONTACT TYPE	FEMALE
	NUMBER OF CONTACTS	8POLES
	HOUSING TYPE	90°
	EXIT CABLE	PG7
	RATED VOLTAGE	30V AC/DC
	RATED CURRENT	2A
	COUPLING NUT MATERIAL	STAINLESS STEEL NUT (AISI304)
	O-RING	NBR
	PROTECTION CLASS	IP65/IP67
	CONNECTOR WITH H.T.P.LOGO	
	PACKAGING:	SINGLY PACKED IN THE PLASTIC BAG

A	PRESS CABLE SREW
B	LAMELLAE PRESS-CABLE SEAL
C	GASKET PRESS-CABLE SEAL
D	HOUSING BLACK
E	SCREW CONTACT GOLD PLATED
F	O-RING
G	INTERNAL CORE M12 A-CODED
H	PLASTIC NUT FOR HOUSING
I	M12 NUT STAINLESS STEEL AISI304

TOLLERANZE ±0.2	DISEGNATORE LORENZO CIMMINO	DATA 19.11.14	SCALA 1:1		DISEGNO
U.d.M / ANGOLO	CONTROLLATO				
DESCRIZIONE: M12 MALE STRAIGHT 180°,8POLES, FIELD ATTACHABLE WITH STAINLESS STEEL(AISI304) NUT. CONNECTOR WITH H.T.P.LOGO		TIPO: M12			MATERIALE
High Tech Products HTP H.T.P. HIGH TECH PRODUCTS		CODICE: 12MC8000-INOX			