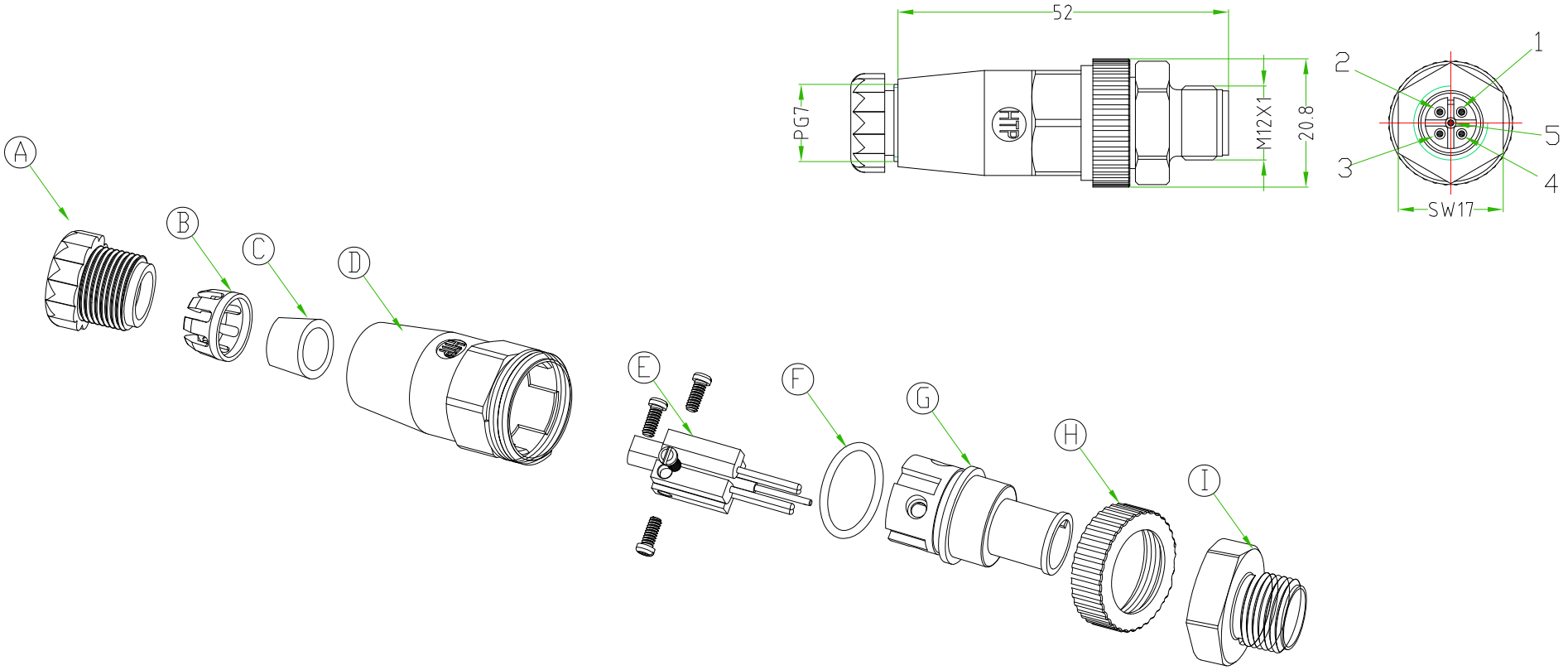

CONNECTOR FEATURES	
PRODUCT TYPE	M12 FIELD ATTACHABLE
CONTACT TYPE	MALE
NUMBER OF CONTACTS	5POLES
HOUSING MATERIAL	PA66+15% Fiber glass
HOUSING TYPE	180°
HOUSING COLOUR	BLACK
CABLE ENTRY	PG7
RATED VOLTAGE	125V AC/DC
RATED CURRENT	4A
COUPLING NUT MATERIAL	STAINLESS STEEL AISI304
O"RING	NBR
PROTECTION CLASS	IP67
CONNECTOR WITH H.T.P.LOGO	

A	PRESS CABLE SREW
B	LAMELLAE PRESS-CABLE SEAL
C	GASKET PRESS-CABLE SEAL
D	HOUSING BLACK
E	SCREW CONTACT GOLD PLATED
F	O-RING
G	INTERNAL CORE M12
H	PLASTIC NUT FOR HOUSING
I	M12 NUT STAINLESS STEEL AISI304

TOLLERANZE ±0.2		DISEGNATORE LORENZO CIMMINO	DATA 27.03.13	SCALA 1:1		PESO
U.d.M	ANGOLO	CONTROLLATO				
DESCRIZIONE M12 MALE 90° 5 POLES FIELD ATTACHABLE,PG7. NUT MATERIAL IN STAINLESS STEEL AISI304 CONNECTOR WITH H.T.P.LOGO.			TIPO M12			MATERIALE
High Tech Products HTP H.T.P. HIGH TECH PRODUCTS			CODICE 12MC5000-INOX			