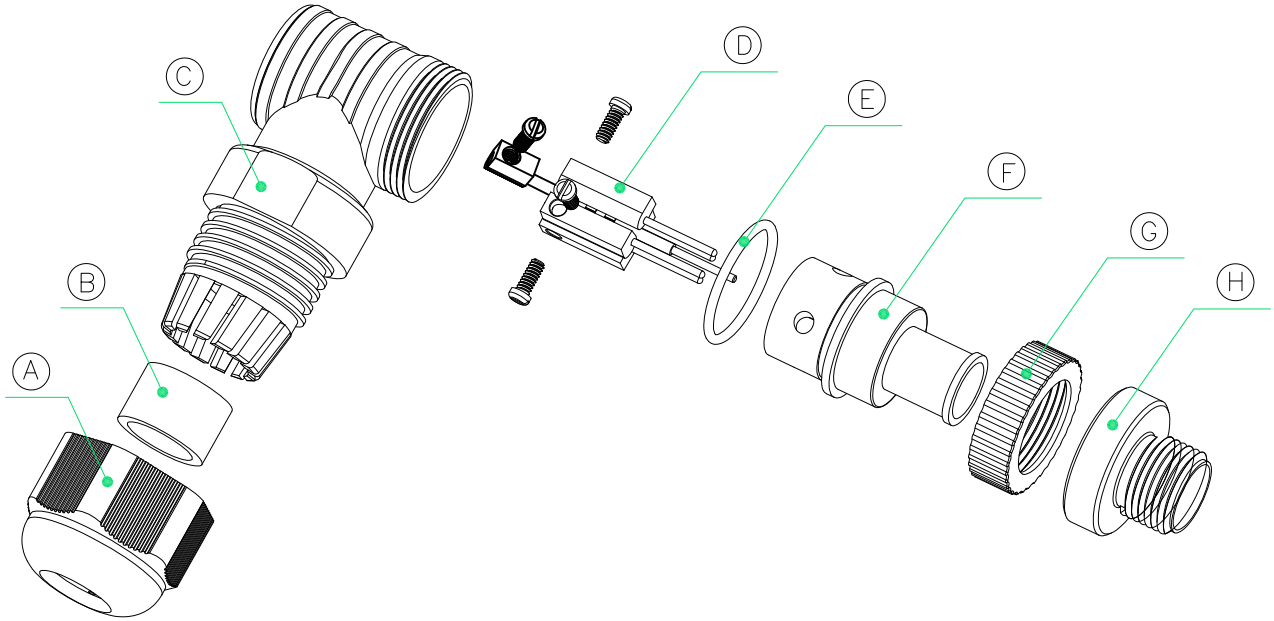

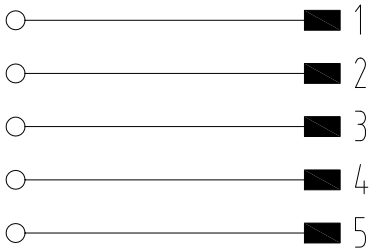

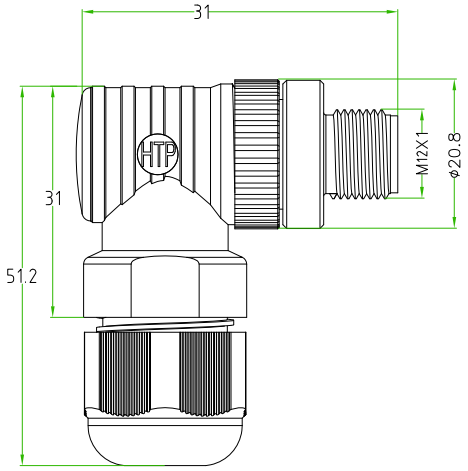

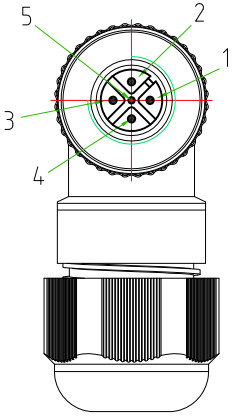

CONNECTOR FEATURES		
	PRODUCT TYPE	M12 FIELD ATTACHABLE
	CONTACT TYPE	MALE
	NUMBER OF CONTACTS	5POLES
	HOUSING MATERIAL	PA66
	HOUSING TYPE	90°
	HOUSING COLOUR	BLACK
	RATED VOLTAGE	60V AC/DC
	EXIT CABLE	FROM ø4mm TO ø8,6mm
	RATED CURRENT	4A
	COUPLING NUT MATERIAL	BRASS+NICKEL PLATED (CuZnNi)
	O"RING	NBR
	PROTECTION CLASS	IP67
	CONNECTOR WITH H.T.P.LOGO	

A	PRESS CABLE SREW
B	GASKET PRESS-CABLE SEAL
C	HOUSING BLACK
D	SCREW CONTACT GOLD PLATED
E	O-RING
F	INTERNAL CORE M12 D-CODED
G	PLASTIC NUT FOR HOUSING
H	M12 NUT BRASS NICKEL PLATED

TOLLERANZE ±0.2	DISEGNATORE LORENZO CIMMINO	DATA 16.09.2009	SCALA 1:1		DISEGNO N.
U.d.M / ANGOLO	CONTROLLATO				
DESCRIZIONE: M12 CONNECTOR MALE 90°,5POLES, FIELD ATTACHED. EXIT CABLE FROM ø4mm TO ø8,6mm.CONNECTOR WITH H.T.P.LOGO		TIPO: M12			MATERIALE
H.T.P. HIGH TECH PRODUCTS		CODICE: 12MB5000-SK			