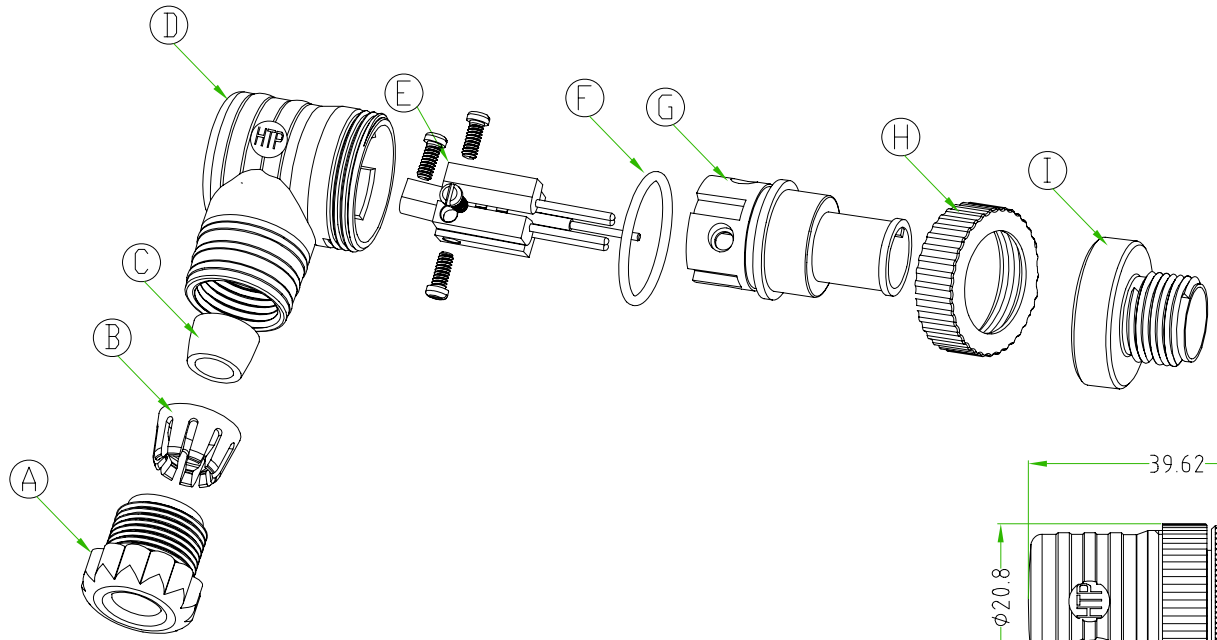

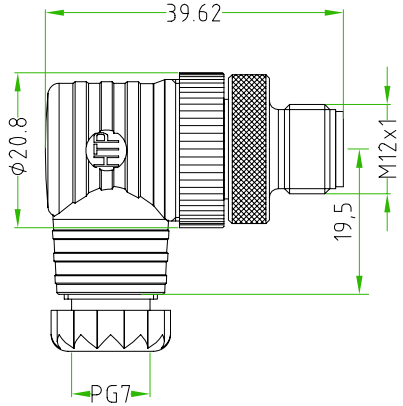

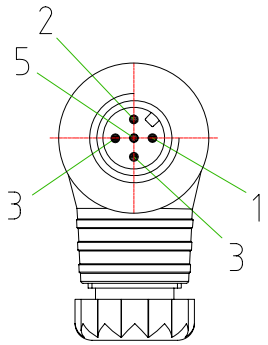

CONNECTOR FEATURES	
TYPE CONCTACT	MALE
NUMBER OF CONTACT	4 POLES
HOUSING	NYLON6 + 30%GLASS FIBRE
TYPE HOUSING	90°
COLOUR HOUSING	BLACK
PRESS CABLE SCREW	PG7
RATED VOLTAGE:	60V AC/DC
RATED CURRENT:	4A
CONTACT MATERIAL	PHOSPHOROUS BRONZE
CONTACT SURFACE MATERIAL:	NICKEL +0.45μm
COUPLING NUT MATERIAL:	Zn Al/Ni
O-RING:	NBR
PROTECTION CLASS:	IP67
TEMPERATURE RANGE:	-25°C TO +90°C

A	PRESS CABLE SREW
B	LAMELLAE PRESS-CABLE SEAL
C	GASKET PRESS-CABLE SEAL
D	HOUSING BLACK
E	SCREW CONTACT GOLD PLATED
F	O-RING
G	INTERNAL CORE M12
H	PLASTIC NUT FOR HOUSING
I	M12 NUT Zn Al/Ni

TOLLERANZE		DISEGNATORE	DATA	SCALA		PESO
U.d.M	ANGOLO	LORENZO CIMMINO CONTROLLATO	02.03.11	1:1		

DESCRIZIONE: M12 MALE TO CABLE 5POLES 90° BLACK PG7 WITH LOGO HTP

TIPO: M12

MATERIALE:

High Tech Products HTP H.T.P. HIGH TECH PRODUCTS

CODICE: 12MB5000