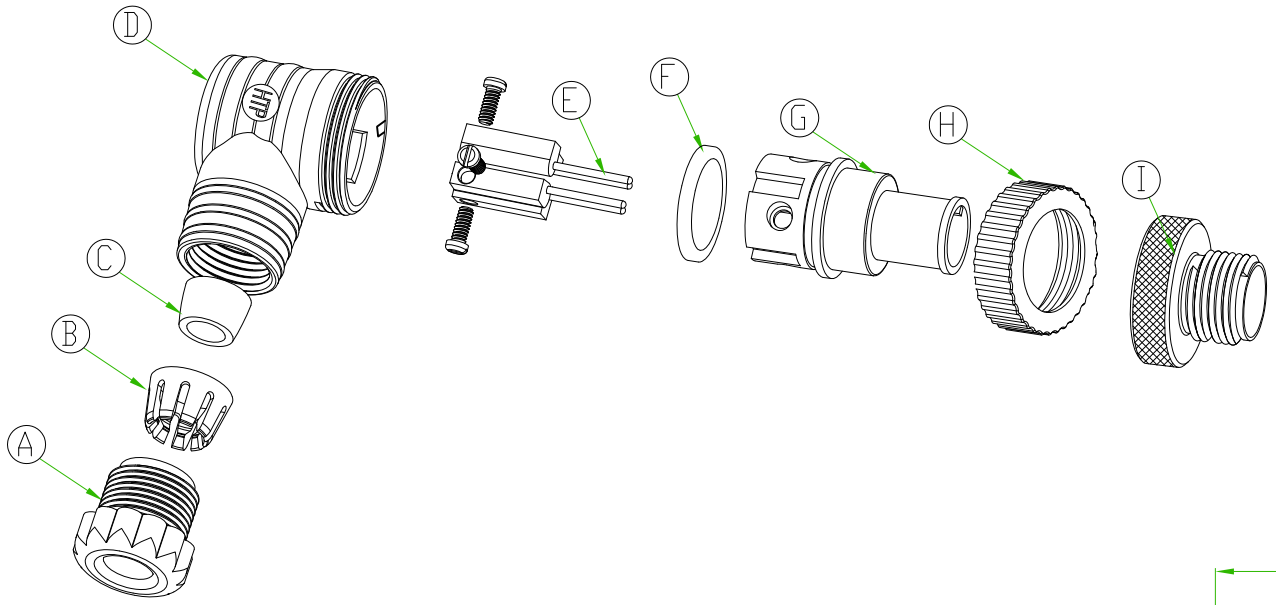


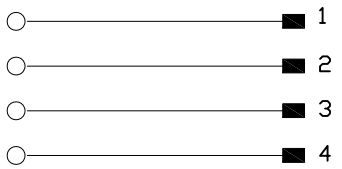


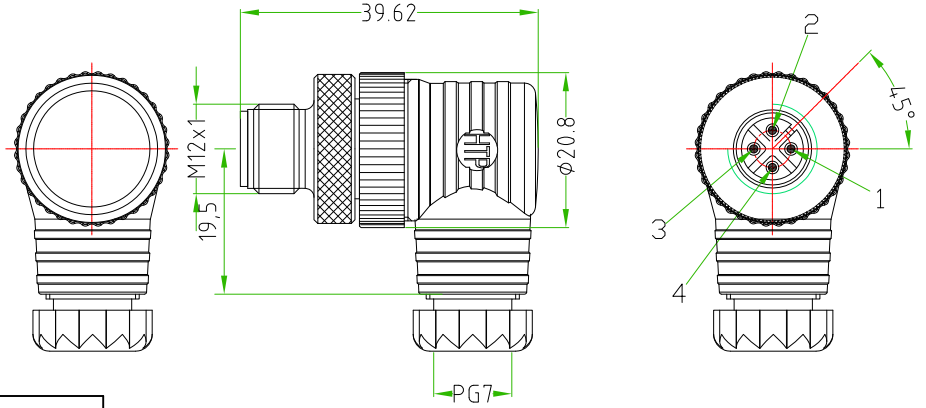


| CONNECTOR FEATURES | |
|---|---|
| TYPE CONCTACT | MALE |
| NUMBER OF CONTACT | 4 POLES |
| HOUSING | NYLON6 + 30%GLASS FIBRE |
| TYPE HOUSING | 90° |
| COLOUR HOUSING | BLACK |
| PRESS CABLE SCREW | PG7 |
| RATED VOLTAGE: | 250V AC/DC |
| RATED CURRENT: | 4A |
| CONTACT MATERIAL | PHOSPHOROUS BRONZE |
| CONTACT SURFACE MATERIAL: | NICKEL +0.45µm |
| COUPLING NUT MATERIAL: | Zn Al/Ni |
| O-RING: | NBR |
| PROTECTION CLASS: | IP67 |
| TEMPERATURE RANGE: | -25°C TO +90°C |

| | |
|---|---|
| A | PRESS CABLE SREW |
| B | LAMELLAE PRESS-CABLE SEAL |
| C | GASKET PRESS-CABLE SEAL |
| D | HOUSING BLACK |
| E | SCREW CONTACT GOLD PLATED |
| F | O-RING |
| G | INTERNAL CORE M12 |
| H | PLASTIC NUT FOR HOUSING |
| I | M12 NUT Zn Al/Ni |

| | | | | | |
|---|---|---|---|---|---|
| TOLLERANZE | | DISEGNATORE MARCO MAZZOLINI | DATA 14.01.09 | SCALA 1:1 | PESO |
| U.d.M | ANGOLO | CONTROLLATO | | | |
| DESCRIZIONE M12 MALE TO CABLE 4POLES 90° BLACK PG7 WITH LOGO HTP | | | TIPO M12 | | MATERIALE |
| High Tech Products HTP H.T.P. HIGH TECH PRODUCTS | | | CODICE 12MB4000 | | |