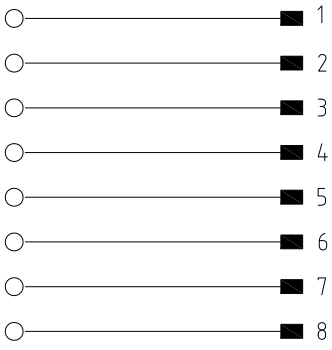

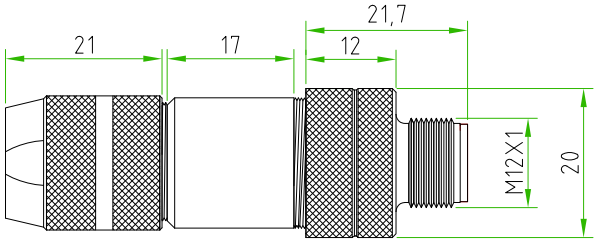

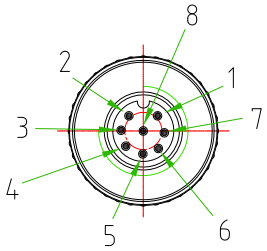

CONNECTOR FEATURES	
PRODUCT TYPE	M12 A-CODED FIELD ATTACHABLE
CONTACT TYPE	MALE(TO SCREW)
NUMBER OF CONTACTS	8POLES
HOUSING TYPE	180°
RATED VOLTAGE	30V AC/DC
RATED CURRENT	2A
COUPLING NUT MATERIAL	Brass+nickel plated (CuZnNi)
HOUSING MATERIAL	Brass+nickel plated (CuZnNi)
INTERNAL CORE MATERIAL	PA66
O-RING	NBR
PROTECTION CLASS	IP65/IP67
PACKAGING	SINGLY PACKED IN PLASTIC BAG

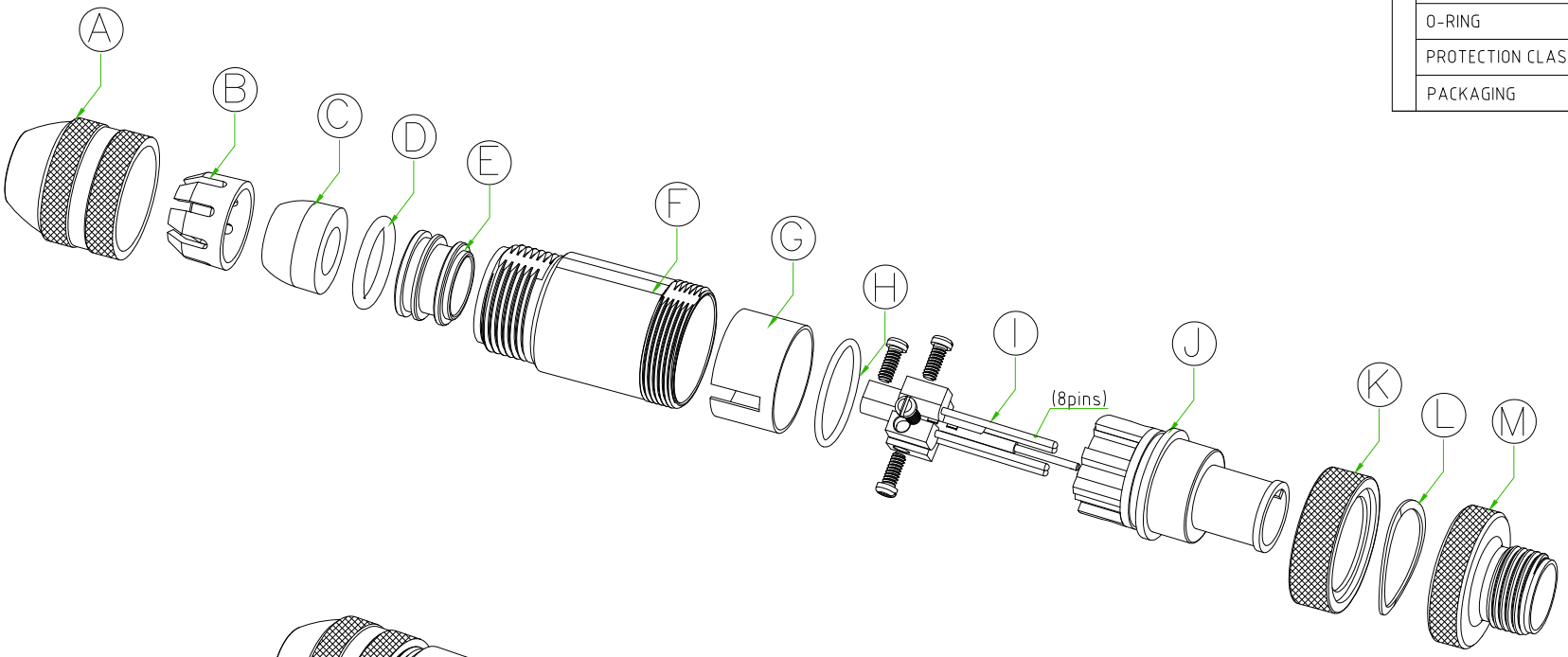

A	PRESS CABLE SREW
B	LAMELLAE PRESS-CABLE SEAL
C	GASKET PRESS-CABLE SEAL
D	O-RING
E	METAL HOLDER TO FIX THE SHIELD
F	HOUSING BRASS NICKEL PLATED
G	PLASTIC PROTECTION
H	O-RING
I	SCREW CONTACT GOLD PLATED
J	INTERNAL CORE M12 A-CODED
K	NUT FOR HOUSING BRASS NICKEL PLATED
L	METAL O-RING
M	M12 NUT BRASS NICKEL PLATED

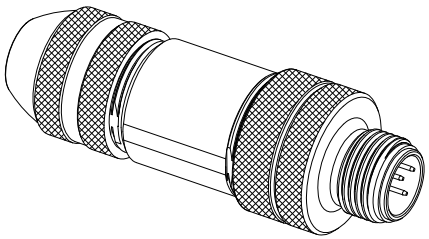

TOLLERANZE ±0.2		DISEGNATORE LORENZO CIMMINO	DATA 15.04.14	SCALA 1:1		PESO
U.d.M	ANGOLO	CONTROLLATO				
DESCRIZIONE M12 MALE STRAIGHT 180°,8POLES, FIELD ATTACHABLE METAL HOUSING. CONNECTOR WITH H.T.P.LOGO			TIPO M12			MATERIALE
H.T.P. HIGH TECH PRODUCTS			CODICE 12M18000			