CONNECTOR FEATURES	
PRODUCT TYPE	M12 A-CODED FIELD ATTACHABLE
CONTACT TYPE	MALE(TO SCREW)
NUMBER OF CONTACTS	4POLES
HOUSING TYPE	180°
RATED VOLTAGE	250V AC/DC
RATED CURRENT	4A
COUPLING NUT MATERIAL	Brass+nickel plated (CuZnNi)
HOUSING MATERIAL	Brass+nickel plated (CuZnNi)
INTERNAL CORE MATERIAL	PA66
O-RING	NBR
PROTECTION CLASS	IP65/67

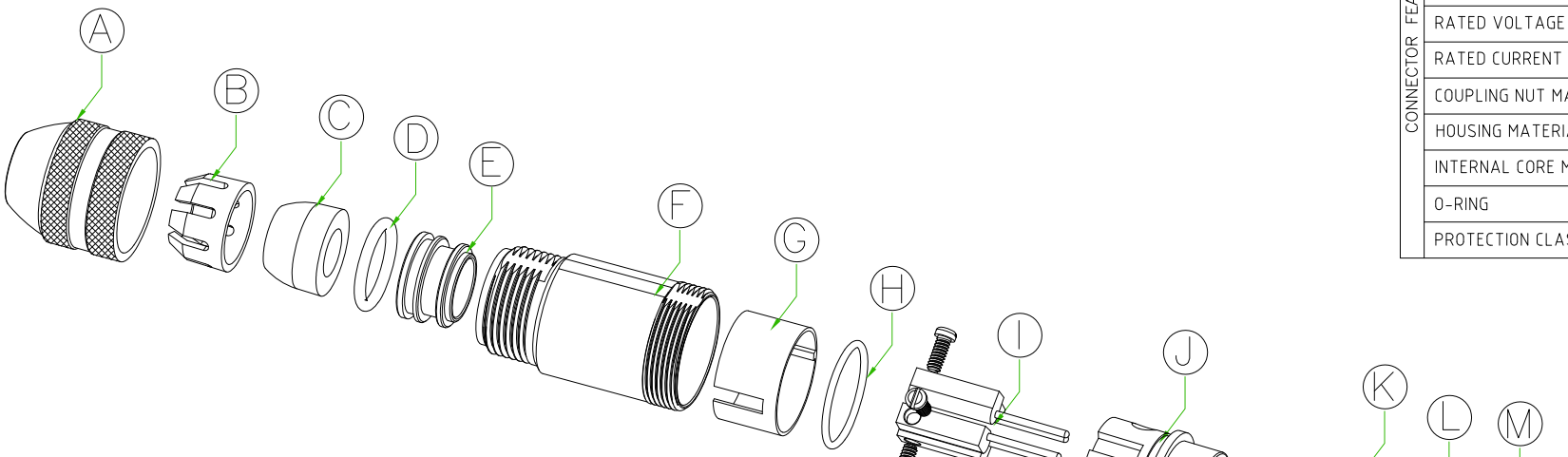

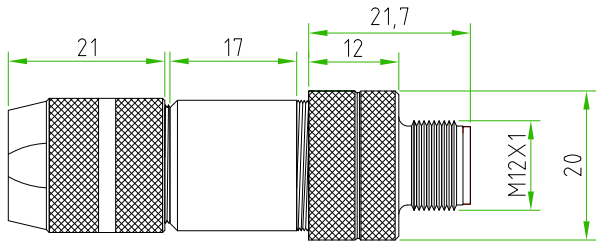

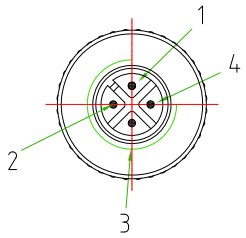

A	PRESS CABLE SREW
B	LAMELLAE PRESS-CABLE SEAL
C	GASKET PRESS-CABLE SEAL
D	O-RING
E	METAL HOLDER TO FIX THE SHIELD
F	HOUSING BRASS NICKEL PLATED
G	PLASTIC PROTECTION
H	O-RING
I	SCREW CONTACT GOLD PLATED
J	INTERNAL CORE M12 A-CODED
K	NUT FOR HOUSING BRASS NICKEL PLATED
L	METAL O-RING
M	M12 NUT BRASS NICKEL PLATED

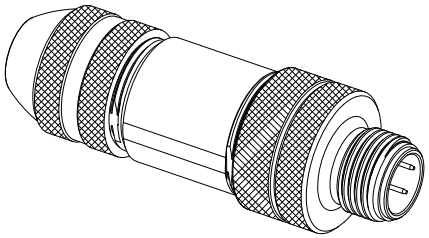

TOLLERANZE ±0.2		DISEGNATORE LORENZO CIMMINO	DATA 18.10.12	SCALA 1:1		PESO
U.d.M	ANGOLO	CONTROLLATO				
DESCRIZIONE M12 MALE FIELD ATTACHABLE 4POLES 180° METAL HOUSING			TIPO M12			MATERIALE
H.T.P. HIGH TECH PRODUCTS			CODICE 12M14000			