DATE	REV.	DESCRIPTION	NAME
13.10.2014	01	On the connector housing must be changed the silk print and the ATEX logo. On the label of the plastic bag must be changed the silk print and the ATEX logo. See the drawing	LORENZO CIMMINO
21.04.2020	02	Updated ATEX housing silk print, updated label and operating instruction sheet for ATEX	ROBERTO SUGLIANI

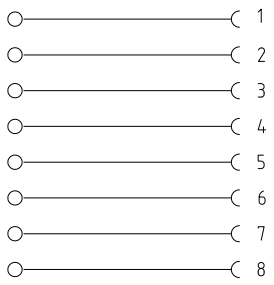

A	PRESS CABLE SREW
B	LAMELLAE PRESS-CABLE SEAL
C	GAKET PRESS-CABLE SEAL
D	HOUSING BLACK
E	SCREW CONTACT GOLD PLATED
F	O-RING
G	INTERNAL CORE M12 A-CODED
H	O-RING
I	PLASTIC NUT FOR HOUSING
J	M12 NUT Brass+nickel plated (CuZnNi)

CONNECTOR FEATURES	
PRODUCT TYPE	M12 A-CODED FIELD ATTACHABLE
CONTACT TYPE	FEMALE
NUMBER OF CONTACTS	8POLES
HOUSING TYPE	90°
EXIT CABLE	PG7
RATED VOLTAGE	30V AC/DC
RATED CURRENT	2A
COUPLING NUT MATERIAL	Brass+nickel plated (CuZnNi)
HOUSING MATERIAL	PA66 - CM3004V0
INTERNAL CORE MATERIAL	PA66 - CM3004V0
O"RING	NBR
PROTECTION CLASS	IP65/IP67
CONNECTOR WITH H.T.P.LOGO	

THIS CODE IS SPECIAL BECAUSE IS THE ATEX CONNECTORS MAIN REFERENCE NORM:ATEX 94/9/CE MATERIAL PA66 - CM3004V0 (Material:V0 UL/CSA), FOR ALL COMPONENT OF THE CONNECTOR

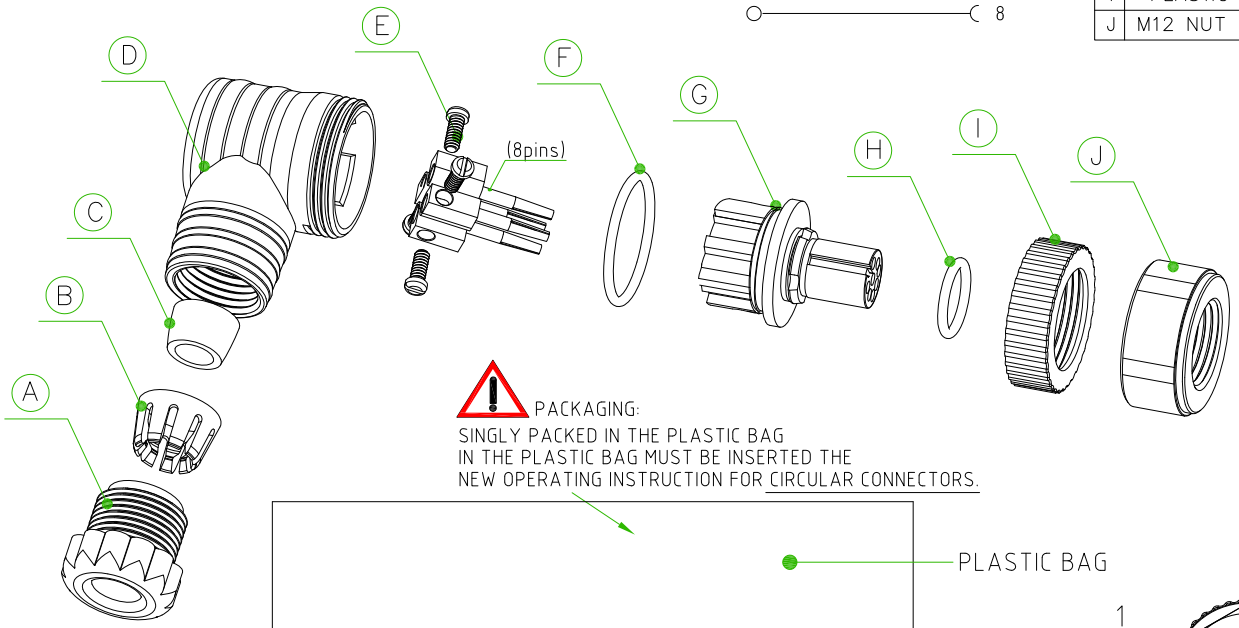

PACKAGING:
SINGLY PACKED IN THE PLASTIC BAG
IN THE PLASTIC BAG MUST BE INSERTED THE
NEW OPERATING INSTRUCTION FOR CIRCULAR CONNECTORS.

PLASTIC BAG

H.T.P. S.r.l.
I-24030 - BREMBATE DI SOPRA(BG)
CODE: 12FB8000-ATEX YEAR:20##
M12 PLASTIC HOUSING
5######
MADE IN CHINA
2632
II 2G Ex e IIC T6 Gb
II 2D Ex tb IIIC T85°C Db IP65/67
AR16ATEX095Xrev2

PRODUCTION YEAR
EXAMPLE:
2018
2019
2020..

REV.02

PAY ATTENTION:

REV.02

TYPE: M12
2632
II 2G Ex eb IIC T6 Gb
II 2D Ex tb IIIC T85°C Db
IP65/IP67
AR16ATEX095Xrev2

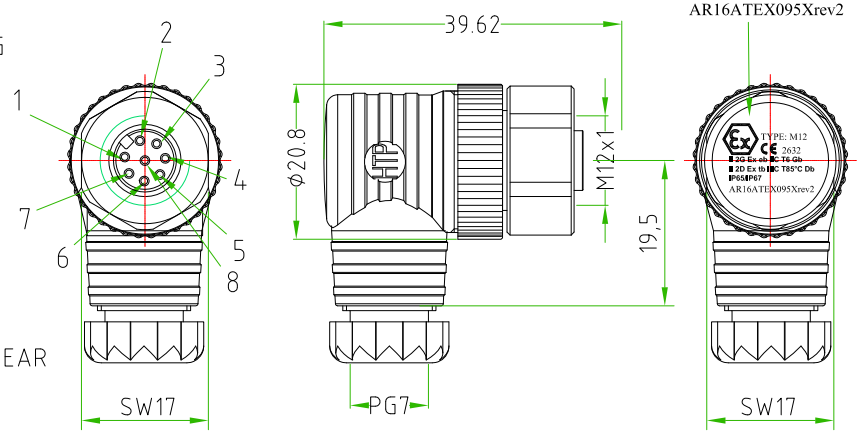

TOLLERANZE ±0.2	DISEGNATORE LORENZO CIMMINO	DATA 07.08.14	SCALA 1:1		DISEGNO 1/2
U.d.M / ANGOLO	CONTROLLATO				
DESCRIZIONE: M12 FEMALE ANGLED 90°,8POLES, FIELD ATTACHABLE. CONNECTOR MAIN REFERENCE NORM ATEX94/9/CE		TIPO: M12			MATERIALE
H.T.P. HIGH TECH PRODUCTS		CODICE: 12FB8000-ATEX			

DATE	REV.	DESCRIPTION	NAME
13.10.2014	01	On the connector housing must be changed the silk print and the ATEX logo. On the label of the plastic bag must be changed the silk print and the ATEX logo. See the drawing	LORENZO CIMMINO

FRONTAL SIDE

BACK SIDE



TOLLERANZE ±0.2		DISEGNATORE LORENZO CIMMINO	DATA 07.08.14	SCALA 1:1		DISEGNO 2/2
U.d.M	ANGOLO	CONTROLLATO				
DESCRIZIONE M12 FEMALE ANGLED 90°,8POLES, FIELD ATTACHABLE. CONNECTOR MAIN REFERENCE NORM ATEX94/9/CE			TIPO M12			MATERIALE
H.T.P. HIGH TECH PRODUCTS			CODICE 12FB8000-ATEX			