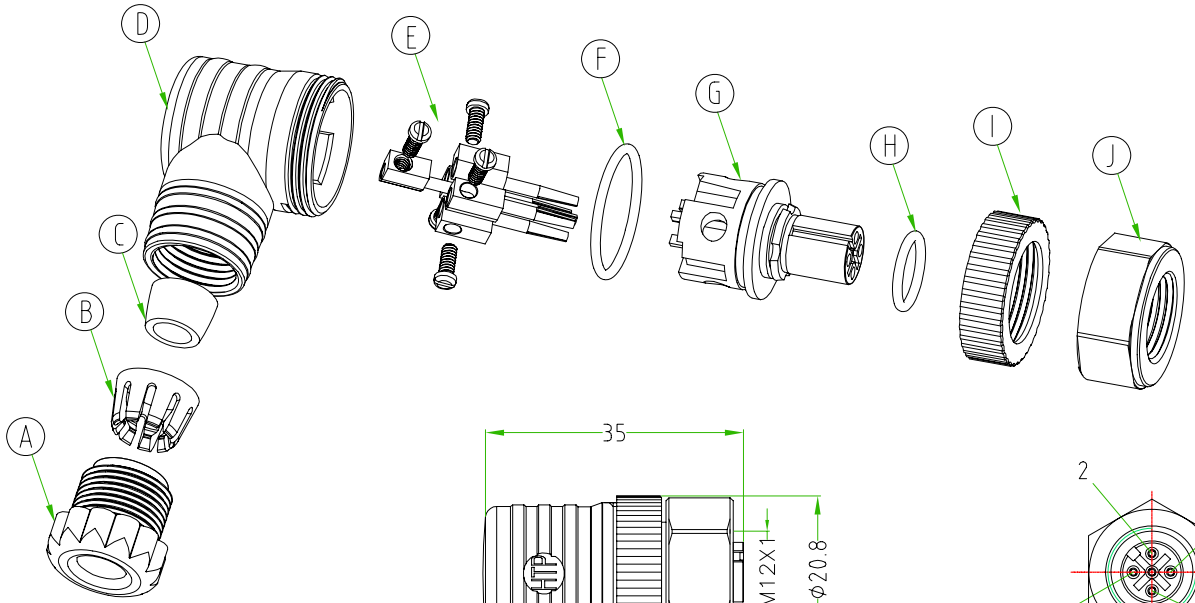

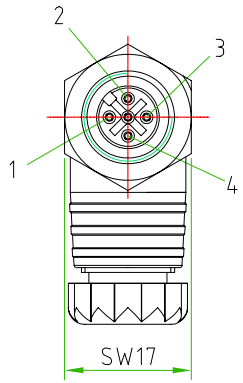

CONNECTOR FEATURES		
	TYPE CONCTACT	FEMALE
	NUMBER OF CONTACT	5POLES
	HOUSING	NYLON66+15% FIBRE GLASS
	TYPE HOUSING	90°
	COLOUR HOUSING	BLACK
	PRESS CABLE SCREW	PG7
	RATED VOLTAGE:	60V AC/DC
	RATED CURRENT:	4A
	CONTACT MATERIAL	PHOSPHOROUS BRONZE
	CONTACT SURFACE MATERIAL:	NICKEL + 0.45μm
	COUPLING NUT MATERIAL:	STAINLESS STEEL AISI304
	O-RING:	NBR
	PROTECTION CLASS:	IP67
	CONNECTOR WITH H.T.P.LOGO	

A	PRESS CABLE SREW
B	LAMELLAE PRESS-CABLE SEAL
C	GASKET PRESS-CABLE SEAL
D	HOUSING BLACK
E	SCREW CONTACT GOLD PLATED
F	O-RING
G	INTERNAL CORE M12
H	O-RING
I	PLASTIC NUT FOR HOUSING
J	M12 NUT STINLESS STEEL AISI304

TOLLERANZE ±0.2	DISEGNATORE LORENZO CIMMINO	DATA 17.09.12	SCALA 1:1		PESO
U.d.M / ANGOLO	CONTROLLATO				
DESCRIZIONE: M12 FEMALE 90° TO CABLE 5POLES,PG7,BLACK HOUSING WITH H.T.P.LOGO.CONNECTOR WITH STAINLESS STEEL (AISI304)NUT		TIPO: M12			MATERIALE
High Tech Products HTP H.T.P. HIGH TECH PRODUCTS		CODICE: 12FB5000-INOX			