Rev.	Modify	Date	Signed	Approved

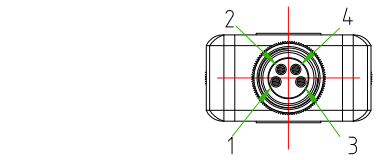

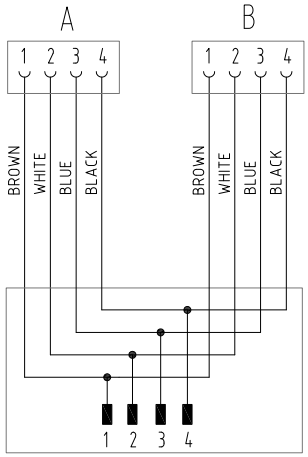

ON EACH CABLE MUST BE SILK PRINTED
THE REFERENCE LETTERS: A-B.

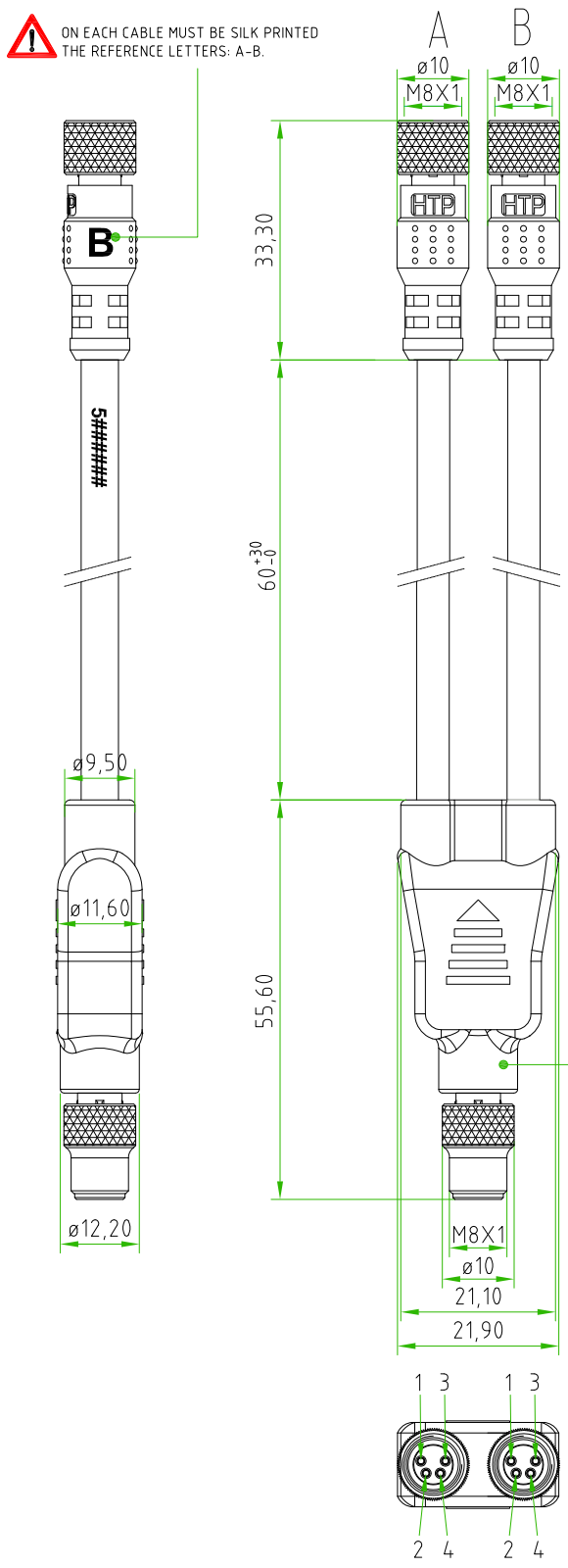

CONNECTORS FEATURES	SIDE A/B	
	PRODUCT TYPE	M8 CIRCULAR CONNECTOR WITH MOULDED CABLE
	CONNECTOR TYPE	STRAIGHT 180°
	CONTACTS TYPE	FEMALE 4POLES
	NUMBER OF CONTACTS CONNECTED	N°4
	PROTECTION CLASS	IP69K
	CONNECTORS WITHOUT H.T.P.LOGO	
	ON EACH CABLE MUST BE SILK PRINTED THE LETTERS: A-B.	

CABLE FEATURES		
	H.T.P.CABLE CODE	CAVO L-4
	NUMBER OF CONDUCTORS	N°4
	CONDUCTORS SECTION	0,34mm²
	CABLE MATERIAL	PVC CEI2022
	COATING COLOUR	GREY RAL 7032
	CONDUCTORS INSULATION MATERIAL	PVC
	CABLE LENGHT	60mm
	ON THE CABLE,NEAR THE CONNECTOR HEAD,MUST BE SILK PRINTED THE H.T.P. PRODUCTION DATE CODE 5######	
	WITHOUT THE HOLDERS FOR CABLE MARKING (PLASTIC PIPE)	

CONNECTOR FEATURES	M12 Y 2WAY	
	PRODUCT TYPE	Y M8CIRCULAR CONNECTOR WITH N°2 EXITS
	CONNECTOR TYPE	STRAIGHT 180°
	CONTACTS TYPE	MALE 4POLES
	NUMBER OF EXITS	2WAY
	CONNECTOR WITHOUT ANY LOGO	

Designer	CIMMINO L.	Date 2018-09-10	Tollerance ±0.3	Units: mm	Series M8 Y 2WAY	Drawing n. 1-1
Approved	SUGLIANI R.	Date 2018-09-10	Scale 1:1	Size: A4	Customer code:	

A4

DESCRIPTION

Y CONNECTOR M8 MALE 4POLES WITH N°2 WAY; N°2 M8 CIRCULAR CONNECTORS,FEMALE, 4POLES,PVC/PVC CEI2022 4x0.34mm², GREY COLOUR, L(A)=60mm; L(B)=60mm. PRODUCT WITH H.T.P.LOGO

H.T.P.PART NUMBER

E4L006-G4-G4

H.T.P. High Tech Products S.R.L. Via Lesina,45 -24030- Brembate di Sopra (Bg) - ITALY Phone:+39.035692509 Fax:+39.035203291 E-mail: info@webhtp.eu Web: http://www.webhtp.eu/

ALL RIGHTS ARE RESERVED.