Rev.	Modify	Date	Signed	Approved

Rev.	Modify	Date	Signed	Approved

Rev.	Modify	Date	Signed	Approved

WHITE 1
BROWN 2
GREEN 3
YELLOW 4
GREY 5
PINK 6
BLUE 7
RED 8

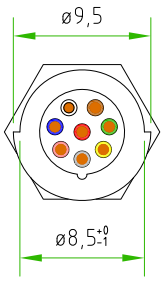

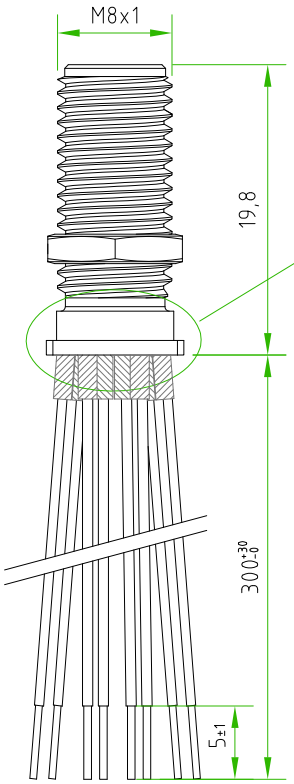

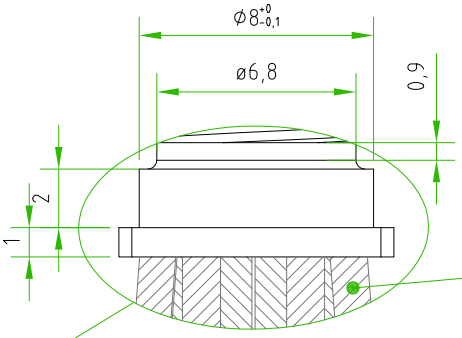

SCALE 2:1

CONNECTOR FEATURES	PRODUCT TYPE	M8 SPECIAL CIRCULAR CONNECTOR TO PANEL WITH WIRES.
	TYPE MOUNTING	BACK MOUNTING
	CONTACTS TYPE	MALE 8POLES
	NUMBER OF CONTACTS CONNECTED	N°8
	HOUSING MATERIAL	BRASS+NICKEL PLATED
	INTRENAL CORE MATERIAL	PA66
	FIXING THREAD	M8x1
	SIZE FIXED NUT(SW)	-
	SIZE MOBILE NUT(SW)	SW10
	PROTECTION CLASS	IP67
	RATED VOLTAGE	30V AC/DC
	RATED CURRENT	1,5A
	CONNECTOR WITHOUT ANY LOGO	
WIRES FEATURES	NUMBER OF CONDUCTORS	N°8
	CONDUCTORS SECTION	0,14mm²
	CONDUCTORS INSULATION MATERIAL	PVC
	CONDUCTORS LENGHT	300mm
	PEELING-TINNING	5mm STANDARD

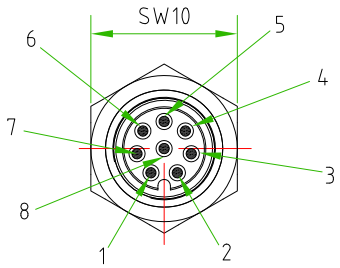

PAY ATTENTION:
NOT APPLY ON THE CONNECTOR THE MOBILE NUT.
ALL THE MOBILE NUTS MUST BE INSERTED SEPARATELY IN
THE PLASTIC BAG WITH THE SAME QUANTITY OF THE CONNECTORS

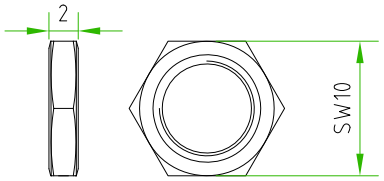

Designer	SUGLIANI R.	Date 2017-07-18	Tollerance ±0.3	Units: mm	Series M8	Drawing n. 1-1
Approved	CIMMINO L.	Date 2017-07-18	Scale 2:1	Size: A4	Customer code:	

A4

HTP™ High Tech Products S.R.L.

DESCRIPTION

CIRCULAR CONNECTOR M8,MALE,TO PANEL,8POLES,BACK MOUNTING, WITH N°8 WIRES PVC 0,14mm² L=300mm,PEELING-TINNING:5mm. CONNECTOR WITHOUT ANY LOGO

H.T.P.PART NUMBER

08MR8K0C-M8X1

H.T.P. High Tech Products S.R.L. Via Lesina,45 -24030- Brembate di Sopra (Bg) - ITALY Phone:+39.035692509 Fax:+39.035203291 E-mail: info@webhtp.eu Web: http://www.webhtp.eu/

ALL RIGHTS ARE RESERVED.