Rev.	Modify	Date	Signed	Approved

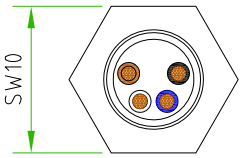

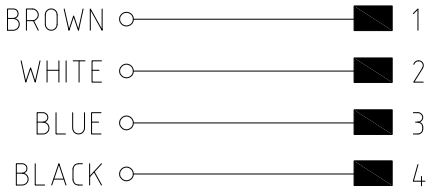

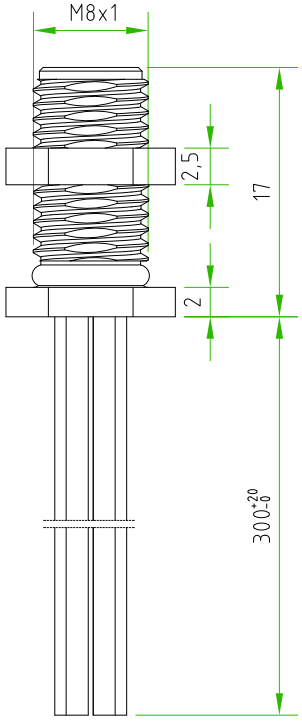

CONNECTOR FEATURES	PRODUCT TYPE	M8 CIRCULAR CONNECTOR TO PANEL WITH WIRES.
	TYPE MOUNTING	BACK MOUNTING
	CONTACTS TYPE	MALE 4POLES
	NUMBER OF CONTACTS CONNECTED	N°4
	HOUSING MATERIAL	STAINLESS STEEL AISI316L
	O-RING MATERIAL	NBR
	FIXING THREAD	M8x1
	SIZE FIXED NUT(SW)	SW10
	SIZE MOBILE NUT(SW)	SW10
	CUT SIZE	7mm (+0,1/-0)
	PROTECTION CLASS	IP67
	RATED VOLTAGE	50V AC/ 60V DC
	RATED CURRENT	3A
	CONNECTOR WITHOUT ANY LOGO	
WIRES FEATURES	NUMBER OF CONDUCTORS	N°4
	CONDUCTORS SECTION	0.25mm^2
	CONDUCTORS INSULATION MATERIAL	PVC
	CONDUCTORS LENGHT	300mm

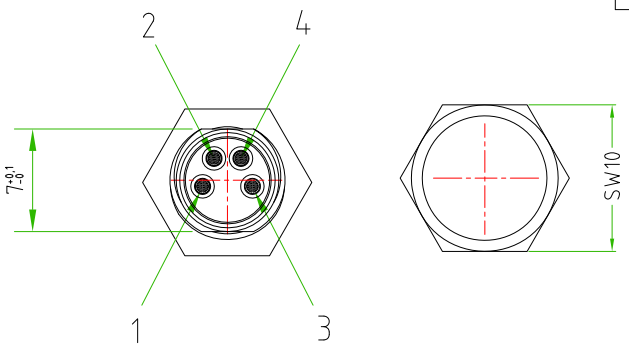

Rev.	Modify	Date	Signed	Approved

Rev.	Modify	Date	Signed	Approved

A4

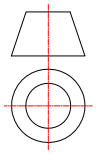

Designer SUGLIANI R.	Date 2019-06-27	Tollerance ±0.3	Units: mm	Series M8		Drawing n. 1-1
Approved CIMMINO L.	Date 2019-06-27	Scale 2:1	Size: A4	Customer code: A0206373		

DESCRIPTION

CIRCULAR CONNECTOR M8,MALE,TO PANEL,4POLES,BACK MOUNTING, COMPLETE WITH CUT, WITH PVC SOLDER WIRES 0.25mm^2 L=300mm. CONNECTOR WITHOUT ANY LOGO

H.T.P.PART NUMBER

08MR4A0C-CUT-IN316

H.T.P. High Tech Products S.R.L. Via Lesina,45 -24030- Brembate di Sopra (Bg) - ITALY Phone:+39.035692509 Fax:+39.035203291 E-mail: info@webhtp.eu Web: http://www.webhtp.eu/

ALL RIGHTS ARE RESERVED.