

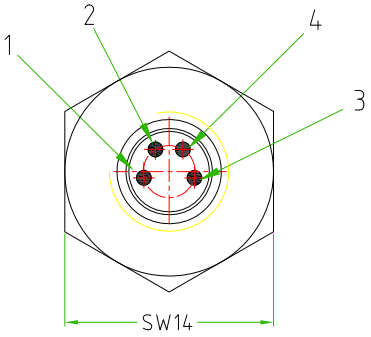

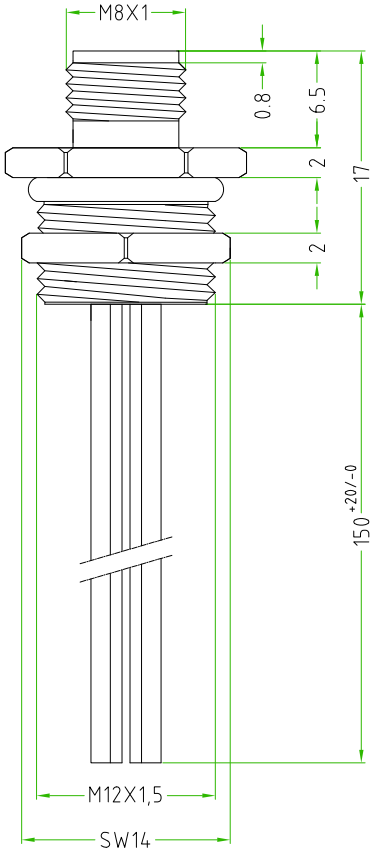

CONNECTOR FEATURES	
CONNECTOR TYPE	M8 TO PANEL
MOUNTING TYPE	FRONTAL
CONTACT TYPE	MALE
NUMBER OF CONTACTS CONNECTED	n°4
HOUSING MATERIAL	Brass+nickel plated (CuZnNi)
FIXING THREAD	M12X1,5
SWITCH FIXED NUT	SW14
SWITCH MOBILE NUT	SW14
CONDUCTOR MATERIAL	PVC
CONDUCTOR LENGHT	150mm
CONDUCTOR SECTION	0.25mm^2
n°OF CONDUCTORS	4
RATED VOLTAGE	50V AC/ 60V DC
RATED CURRENT	4A

TOLLERANZE ±0.2	DISEGNATORE ROBERTO SUGLIANI	DATA 20.02.2017	SCALA 2:1		DISEGNO N.
U.d.M / ANGOLO	CONTROLLATO				
DESCRIZIONE: M8 CONNECTOR MALE TO PANEL,4POLES,FRONTAL MOUNTING, WITH N°4 WIRES,PVC,0,25mm^2,LENGHT 150mm,THREAD M12X1,5.		TIPO: M8			MATERIALE
H.T.P. HIGH TECH PRODUCTS		CODICE: 08MP4A0A5-M12			