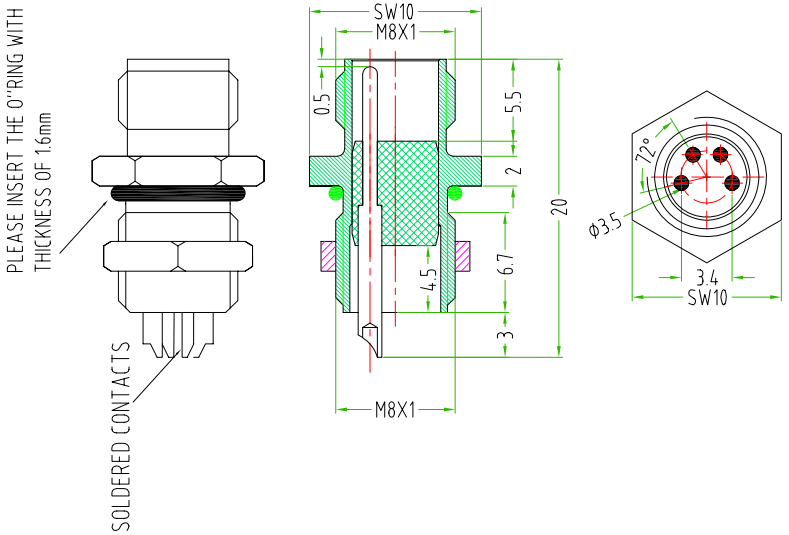

CONNECTOR FEATURES	
CONNECTOR TYPE	M8 TO PANEL
MOUNTING TYPE	FRONTAL
CONTACT TYPE	MALE
CONTACT TYPE	SOLDERED
NUMBER OF CONTACTS CONNECTED	n°4
HOUSING MATERIAL	METAL (CuZn/Ni)
THREAD	M8X1
SWITCH FIXED NUT	SW10

TOLLERANZE		DISEGNATORE MARO MAZZOLINI	DATA 01.03.10	SCALA 2:1	DISEGNO N.
U.d.M	ANGOLO	CONTROLLATO			
DESCRIZIONE M8 MALE TO PANEL 4POLES FRONTAL MOUNTING, WITH N°4CONTACTS TO SOLDERED.			TIPO M8		MATERIALE
H.T.P. HIGH TECH PRODUCTS			CODICE 08MP4000-M8X1		