BROWN — 1

BLUE — 3

BLACK — 4

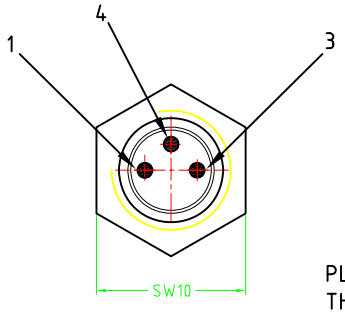

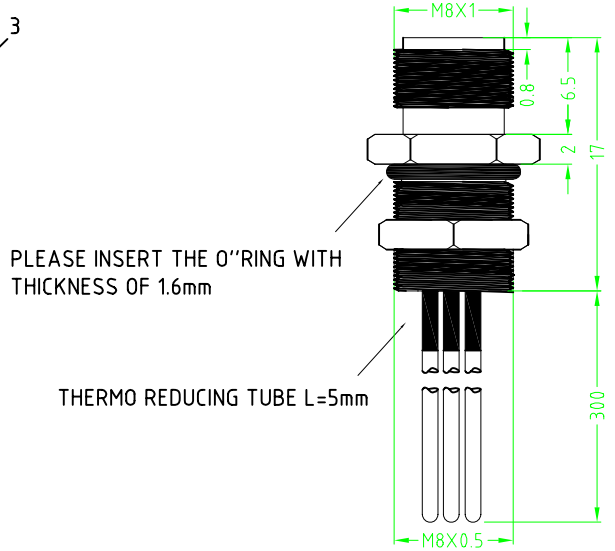

CONNECTOR FEATURES	
CONNECTOR TYPE	M8 TO PANEL
MOUNTING TYPE	FRONTAL
CONTACT TYPE	MALE
NUMBER OF CONTACTS CONNECTED	n°3
HOUSING MATERIAL	METAL (CuZn/Ni)
THREAD	M8X0.5
SWITCH FIXED NUT	SW10
CONDUCTOR MATERIAL	PVC
CONDUCTOR LENGHT	300mm
CONDUCTOR SECTION	0.25mm^2
n°OF CONDUCTORS	3
THERMO REDUCING TUBE	L=5mm±1

TOLLERANZE	U.d.M	ANGOLO	DISEGNATORE LORENZO CIMMINO	CONTROLLATO	DATA 06.07.09	SCALA 2:1	DISEGNO N.

DESCRIZIONE: M8 CONNECTOR MALE TO PANEL,3POLES,FRONTAL MOUNTING, WITH N°3 WIRES,PVC,0,25mm^2,LENGHT 300mm,THREAD M8X0.5.

TIPO: M8

MATERIALE:

H.T.P. HIGH TECH PRODUCTS

CODICE: 08MP3A0C