

CONNECTOR FEATURES	
PRODUCT TYPE	M8-M8 EXTENSION
CONTACT TYPE	FEMALE-MALE
CABLE LENGHT	600mm
M8 FEMALE 90° N°2 LED PNP	3 POLES
M8 MALE 180°	3 POLES
PROTECTION CLASS	IP69K
NUMBER OF CONTACTS CONNECTED	N°3
RATED VOLTAGE	30V AC/DC
RATED CURRENT	4A
CONNECTORS WITH H.T.P.LOGO	
EXTENSION WITH THE HOLDERS FOR CABLE MARKING	

CABLE FEATURES	
H.T.P.CABLE CODE	CAVO D-3
NUMBER OF CONDUCTORS	N°3
CONDUCTOR SECTION	0.34mm²
CABLE MATERIAL	PUR
COATING COLOUR	BLACK
CONDUCTOR INSULATION MATERIAL	PUR

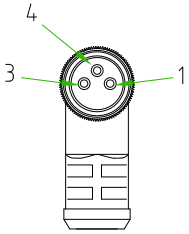

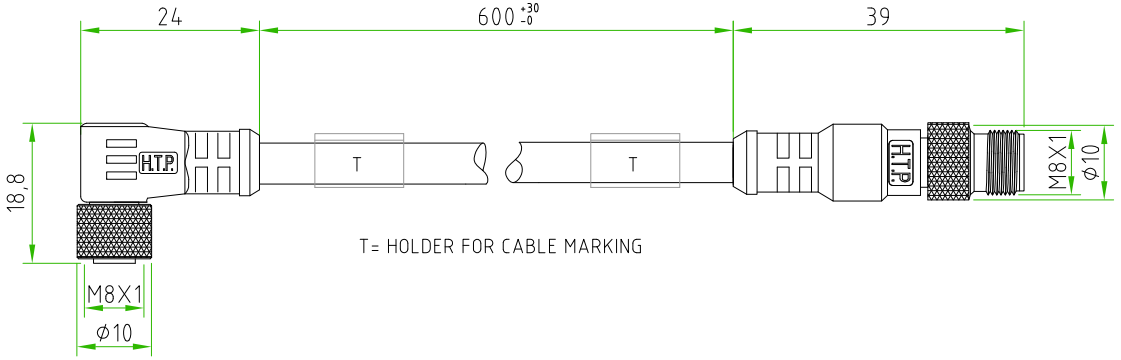

T= HOLDER FOR CABLE MARKING

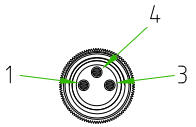

TOLLERANZE ±0.3	DISEGNATORE LORENZO CIMMINO	DATA 09-07-14	SCALA 1:1		RIF.CLIENTE
U.d.M / ANGOLO	CONTROLLATO				
DESCRIZIONE: EXTENSION M8 FEMALE,ANGLED 90°,3 POLES,WITH N°2 LED PNP,WITH CABLE PUR/PUR,BLACK,3X0,25mm²,L=0,6m+M8 MALE,STRAIGHT 180°,3POLES CONNECTORS WITH H.T.P.LOGO		TIPO: EXTENSION M8-M8			MATERIALE
H.T.P. HIGH TECH PRODUCTS		CODICE: 08FF3C0F08MD			