

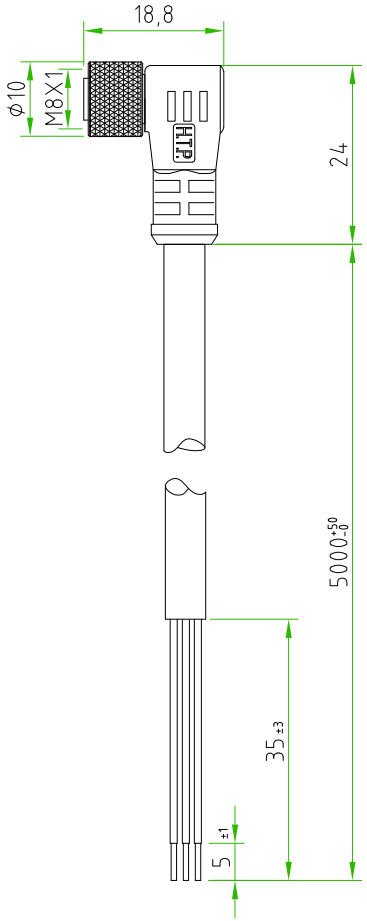

CONNECTOR FEATURES	CONNECTOR TYPE	M8 90°
	CONTACT TYPE	FEMALE 3POLES
	CABLE LENGHT	5000mm
	PROTECTION CLASS	IP69K
	STRIPPING	35mm STANDARD
	PEELING AND TINNING	5mm STANDARD
	NUMBER OF CONTACTS CONNECTED	N°3
	RATED VOLTAGE	30V AC/DC
	RATED CURRENT	4A
	CONNECTOR WITH N°2 LED (NPN CIRCUIT)	
	CONNECTOR WITH H.T.P.LOGO	
CABLE FEATURES	H.T.P.CABLE CODE	CAVO C-3
	NUMBER OF CONDUCTORS	N°3
	CONDUCTOR SECTION	0.25mm²
	CABLE MATERIAL	PUR
	COATING COLOUR	BLACK
	CONDUCTOR INSULATION MATERIAL	PUR

TOLLERANZE	DISEGNATORE: LORENZO CIMMINO	DATA: 26-05-14	SCALA: 1:1		DISEGNO N.
U.d.M / ANGOLO	CONTROLLATO				
DESCRIZIONE: M8 FEMALE 90° 3 POLES WITH CABLE PUR/PUR 3X0.25mm² BLACK L=5m,WITH N°2 LED NPN. CONNECTOR WITH H.T.P.LOGO		TIPO: M8			MATERIALE
H.T.P. HIGH TECH PRODUCTS		CODICE: 08FE3C5Z			