Rev.	Modify	Date	Signed	Approved

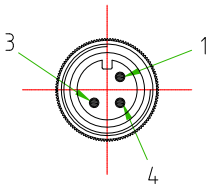

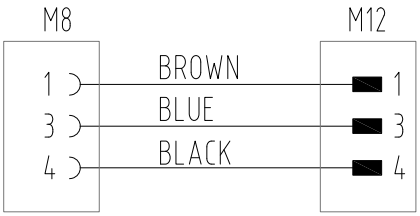

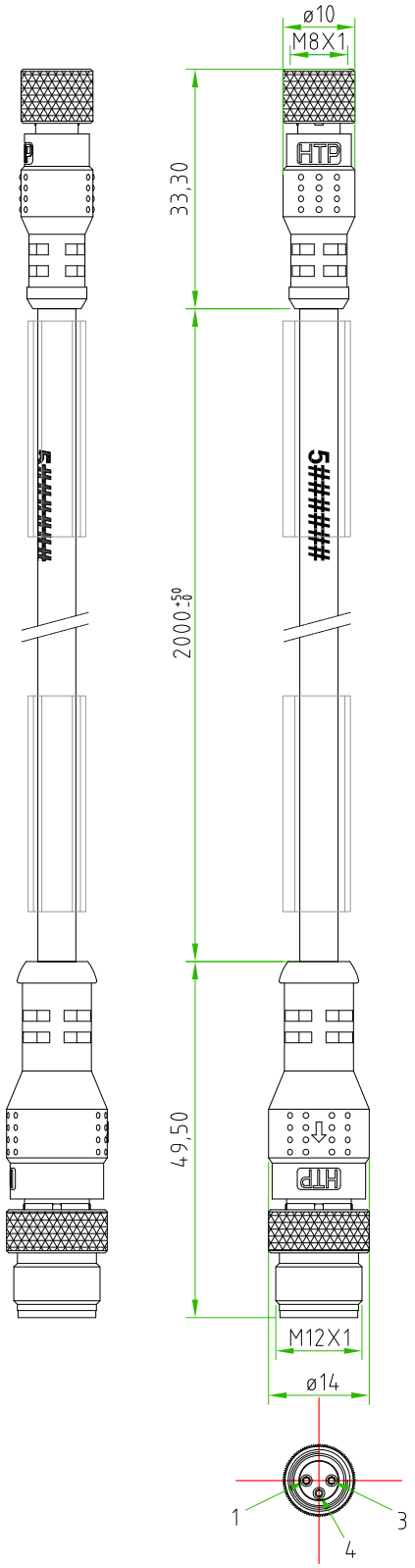

CONNECTOR FEATURES	PRODUCT TYPE	EXTENSION M8-M12 CIRCULAR CONNECTORS WITH MOULDED CABLE
	M8 CONNECTOR TYPE	STRAIGHT 180° FEMALE 3POLES
	M12 CONNECTOR TYPE	STRAIGHT 180° MALE 3POLES
	NUMBER OF CONTACTS CONNECTED	N°3
	PROTECTION CLASS	IP69K
	RATED VOLTAGE	50V AC / 60V DC
	RATED CURRENT	3A
	CONNECTORS WITH H.T.P.LOGO	
CABLE FEATURES	H.T.P.CABLE CODE	CAVO C-3-K6-IS USE THE CABLE CAVO 31-3-K6-IS
	NUMBER OF CONDUCTORS	N°3
	CONDUCTORS SECTION	0,25mm²(AWG 24)
	CABLE MATERIAL	PUR ULstyle21576 c UL us
	COATING COLOUR	BLACK
	CONDUCTORS INSULATION MATERIAL	TPO
	CABLE LENGHT	2000mm
	HIGH FLEX (CLASS 6)	
	CABLE PROVIDED BY H.T.P. ITALY	
	ON THE CABLE,NEAR THE CONNECTOR HEAD,MUST BE SILK PRINTED THE H.T.P. PRODUCTION DATE CODE 5######	
	ON THE CABLE MUST BE APPLIED N°2 HOLDERS FOR CABLE MARKING.	

CUSTOMER APPROVAL	
SIGNATURE	DATE
PLEASE SIGN AND RETURN	

Designer	CIMMINO L.	Date	2018-03-27	Tollerance	±0.3	Units:	mm	Series	M8-M12	Drawing n. 1-1
Approved	SUGLIANI R.	Date	2018-03-27	Scale	1:1	Size:	A4	Customer code:		

A4

HTP™ HIGH TECH PRODUCTS S.R.L.

DESCRIPTION

EXTENSION CIRCULAR CONNECTORS M8,FEMALE,STRAIGHT 180°,3POLES+M12 MALE,STRAIGHT 180°,3POLES,WITH CABLE PUR/TPO,3x0,25mm²,BLACK COLOUR, HIGH FLEX,ULstyle21576,L=2m.CONNECTORS WITH H.T.P.LOGO

H.T.P.PART NUMBER

08FD3C2Z12MD-K6-IS

H.T.P. High Tech Products S.R.L. Via Lesina,45 -24030- Brembate di Sopra (Bg) - ITALY Phone:+39.035692509 Fax:+39.035203291 E-mail: info@webhtp.eu Web: http://www.webhtp.eu/

ALL RIGHTS ARE RESERVED.