| | |
|---|---|
| BROWN | 1 |
| WHITE | 2 |
| BLUE | 3 |
| BLACK | 4 |

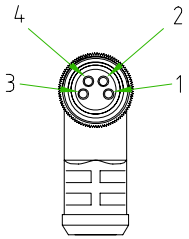


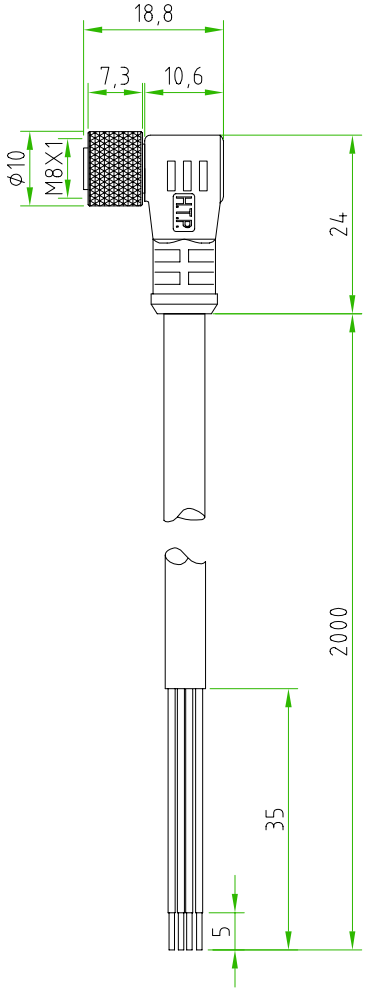


| | | |
|---|---|---|
| CONNECTOR FEATURES | CONNECTOR TYPE | M8 90° |
| | CONTACT TYPE | FEMALE 4POLES |
| | CABLE LENGHT | 2000mm |
| | PROTECTION CLASS | IP69K |
| | STRIPPING | 35mm STANDARD |
| | PEELING | 5mm STANDARD |
| | NUMBER OF CONTACTS CONNECTED | N°4 |
| | CONNECTOR WITH H.T.P.LOGO | |
| CABLE FEATURES | H.T.P.CABLE CODE | N |
| | NUMBER OF CONDUCTORS | N.4 |
| | CONDUCTOR SECTION | 0.25mm² |
| | CABLE MATERIAL | PVC CEI2022 |
| | COATING COLOUR | GREY |
| | CONDUCTOR INSULATION MATERIAL | PVC |

| | | | | | |
|---|---|---|---|---|---|
| TOLLERANZE | | DISEGNATORE: LORENZO CIMMINO | DATA: 16-01-12 | SCALA: 1:1 | DISEGNO N. |
| U.d.M | ANGOLO | CONTROLLATO | | | |
| DESCRIZIONE: M8 FEMALE 90° 4 POLES WITH CABLE PVC/PVC CEI2022,4X0.25mm²,GREY,L=2m | | | TIPO: M8 | | MATERIALE |
| High Tech Products HTP H.T.P. HIGH TECH PRODUCTS | | | CODICE: 08FA4N2Z | | |