

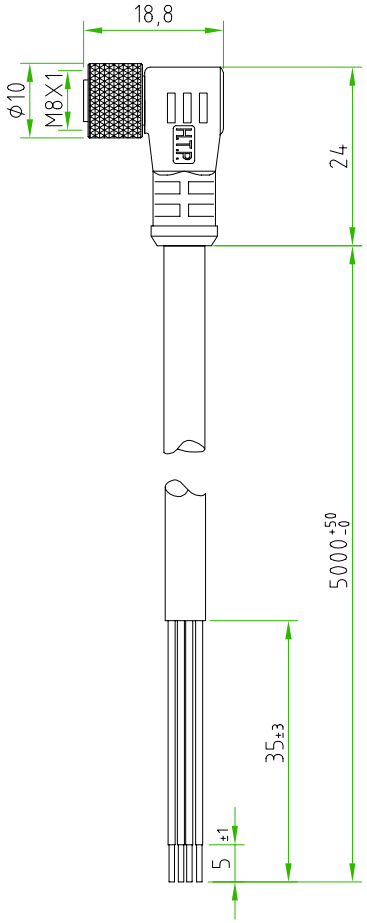

CONNECTOR FEATURES	CONNECTOR TYPE	M8 90°
	CONTACT TYPE	FEMALE 4POLES
	CABLE LENGHT	5000mm
	PROTECTION CLASS	IP69K
	STRIPPING	35mm STANDARD
	PEELING AND TINNING	5mm STANDARD
	NUMBER OF CONTACTS CONNECTED	N°4
	RATED VOLTAGE	30V AC/DC
	RATED CURRENT	4A
	CONNECTOR WITH H.T.P.LOGO	
CABLE FEATURES	H.T.P.CABLE CODE	CAVO C-4-K6
	NUMBER OF CONDUCTORS	N°4
	CONDUCTOR SECTION	0.25mm²
	CABLE MATERIAL	PUR
	COATING COLOUR	BLACK
	CONDUCTOR INSULATION MATERIAL	PUR

THE CABLE IS HIGH FLEX "-K6" (CLASS 6).
(THE COPPER WIRES INNER TO THE CONDUCTOR WITH SECTION 0,08mm²)

TOLLERANZE ±0.3	DISEGNATORE LORENZO CIMMINO	DATA 05-09-13	SCALA 1:1		DISEGNO N.
U.d.M / ANGOLO	CONTROLLATO				
DESCRIZIONE: M8 FEMALE 90° 4 POLES,WITH CABLE PUR/PUR,4X0.25mm²,BLACK,HIGH FLEX,L=5m CONNECTOR WITH H.T.P.LOGO		TIPO: M8			MATERIALE
High Tech Products HTP H.T.P. HIGH TECH PRODUCTS		CODICE: 08FA4C5Z-K6			