

CONNECTOR FEATURES	PRODUCT TYPE	EXTENSION
	CABLE LENGHT	200mm
	M8 FEMALE 90°	4POLES
	M8 MALE 90°	4POLES
	PROTECTION CLASS	IP69K
CABLE FEATURES	H.T.P. CABLE CODE	A
	NUMBER OF CONDUCTORS	n°4
	CONDUCTOR SECTION	0.25mm^2
	CABLE MATERIAL	PVC CEI2022
	COATING COLOUR	BLACK
	CONDUCTOR ISULATION MATERIAL	PVC
	EXTENSION WITHOUT THE HOLDER FOR CABLE MARKING	

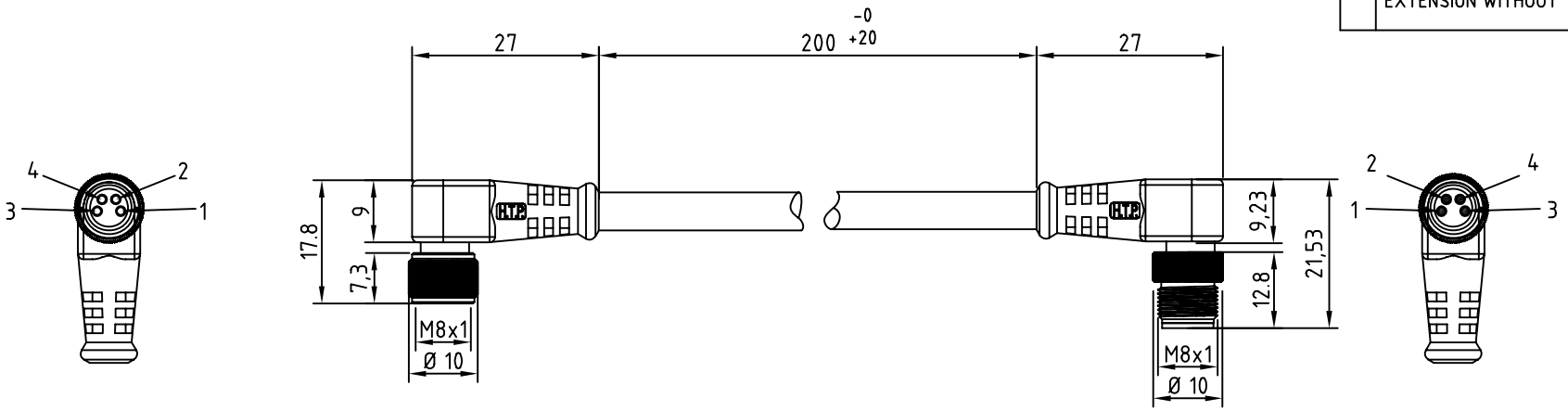

TOLLERANZE		DISEGNATORE LORENZO CIMMINO	DATA 19-10-09	SCALA 1:1	DISEGNO
U.d.M	ANGOLO	CONTROLLATO			
DESCRIZIONE: EXTENSION M08 FEMALE,90°,4 POLES,WITH CABLE PVC/PVC,CEI2022, BLACK,4X0,25mm^2,L=200mm + M8 MALE,ANGLED 90°, 4POLES			TIPO: EXTENSION M8		MATERIALE
H.T.P. HIGH TECH PRODUCTS			CODICE: 08FA4A0B08MA		