BROWN — 1

BLUE — 3

BLACK — 4

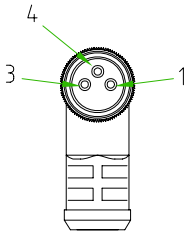

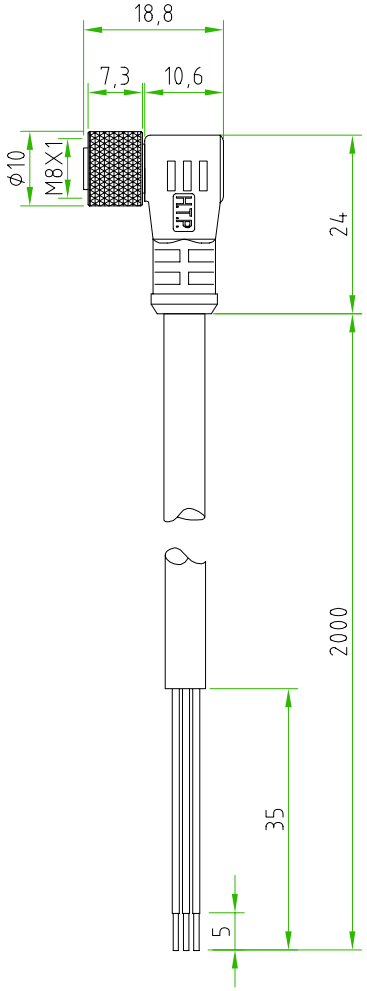

CONNECTOR FEATURES	CONNECTOR TYPE	M8 90°
	CONTACT TYPE	FEMALE 3POLES
	CABLE LENGHT	2000mm
	PROTECTION CLASS	IP69K
	STRIPPING	35mm STANDARD
	PEELING AND TINNING	5mm STANDARD
	NUMBER OF CONTACTS CONNECTED	N°3
	CONNECTOR WITH H.T.P.LOGO	
CABLE FEATURES	H.T.P.CABLE CODE	N
	NUMBER OF CONDUCTORS	N°3
	CONDUCTOR SECTION	0.25mm²
	CABLE MATERIAL	PVC CEI2022
	COATING COLOUR	GREY
	CONDUCTOR INSULATION MATERIAL	PVC

TOLLERANZE		DISEGNATORE: LORENZO CIMMINO	DATA: 03-12-10	SCALA: 1:1	DISEGNO N.
U.d.M	ANGOLO	CONTROLLATO			
DESCRIZIONE: M8 FEMALE 90° 3 POLES WITH CABLE PVC/PVC,CEI2022,3X0.25mm²,GREY,L=2m			TIPO: M8		MATERIALE
High Tech Products HTP H.T.P. HIGH TECH PRODUCTS			CODICE: 08FA3N2Z		