

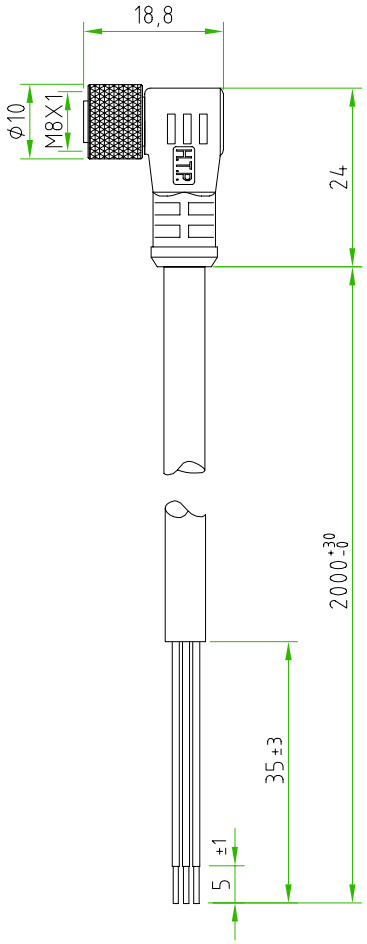

CONNECTOR FEATURES	CONNECTOR TYPE	M8 90°
	CONTACT TYPE	FEMALE 3POLES
	CABLE LENGHT	2000mm
	PROTECTION CLASS	IP69K
	STRIPPING	35mm STANDARD
	PEELING AND TINNING	5mm STANDARD
	NUMBER OF CONTACTS CONNECTED	N°3
	RATED VOLTAGE	60V AC/DC
	RATED CURRENT	4A
	CONNECTOR WITH H.T.P.LOGO	
CABLE FEATURES	H.T.P.CABLE CODE	CAVO C-3-K6 (USE THE CABLE CAVO 31-3-K6-IS)
	NUMBER OF CONDUCTORS	N°3
	CONDUCTOR SECTION	0.25mm²
	CABLE MATERIAL	PUR H.F. UL/CSA
	COATING COLOUR	BLACK
	CONDUCTOR INSULATION MATERIAL	PP
	THIS CABLE IS PROVIDED BY H.T.P.	
	THE CABLE IS HIGH FLEX "-K6" (CLASS 6).	

TOLLERANZE ±0.3	DISEGNATORE LORENZO CIMMINO	DATA 26-09-13	SCALA 1:1		DISEGNO N.
U.d.M / ANGOLO	CONTROLLATO				
DESCRIZIONE M8 FEMALE 90° 3 POLES WITH CABLE PUR/PP 3X0.25mm² UL/CSA HALOGEN FREE HIGH FLEX 2m CONNECTOR WITH H.T.P.LOGO		TIPO M8			MATERIALE
High Tech Products HTP H.T.P. HIGH TECH PRODUCTS		CODICE 08FA3C2Z-K6-IS			