Rev.	Modify	Date	Signed	Approved

Rev.	Modify	Date	Signed	Approved

Rev.	Modify	Date	Signed	Approved
01	-	2018.08.08	CIMMINO	SUGLIANI
02	-	2019.05.22	SUGLIANI	CIMMINO

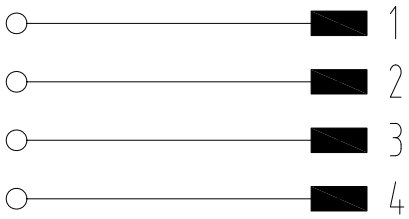

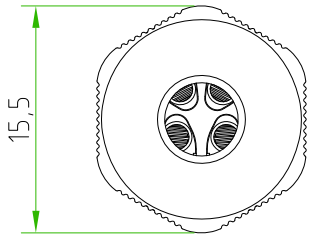

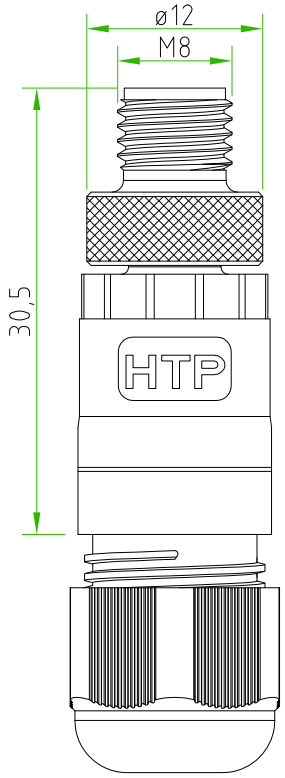

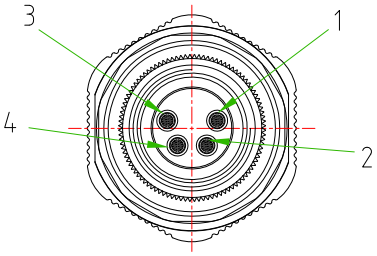

CONNECTOR FEATURES		
	PRODUCT TYPE	M8 CIRCULAR CONNECTOR FIELD ATTACHABLE
	HOUSING MATERIAL/COLOUR	**REV.02** PA66+30%GF /BLACK
	PRESS-CABLE MATERIAL/COLOUR	**REV.02** PA66+30%GF /BLACK
	INTRENAL CORE MATERIAL/COLOUR	**REV.02** PA66+30%GF /BLACK
	CONTACTS TYPE	MALE SCREW CONTACTS
	NUMBER OF POLES	4POLES
	SUITABLE CABLE	FROM ø3,5mm TO ø5,5mm
	MAX.CONDUCTOR SIZE	0,5mm²
	PROTECTION CLASS	IP67
	RATED VOLTAGE	50V AC / 60V DC
	RATED CURRENT	3A
	CONNECTOR TEMPERATURE RANGE	from -40°C to +90°C
	SEAL MATERIAL	NBR
	CONNECTOR WITH H.T.P. LOGO	

PACKAGING: **REV.01**
SINGLY PACKED IN THE PLASTIC BAG
(PLASTIC BAG WITHOUT ANY LOGO AND LABEL)

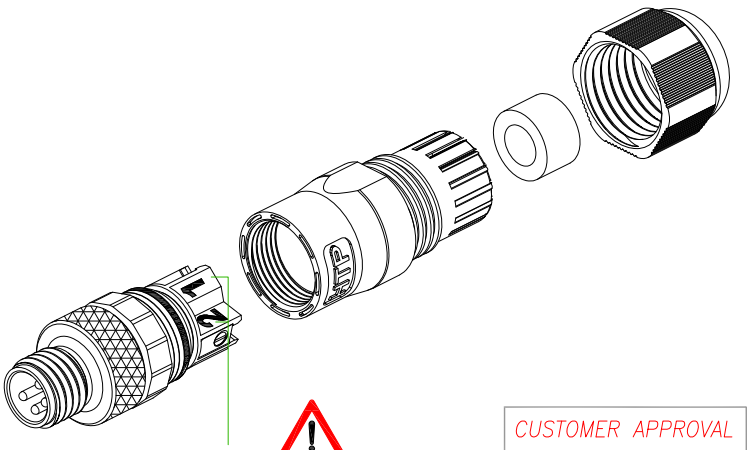

ON THE INTERNAL CORE
MUST BE SILK PRINTED
THE CONTACTS NUMBERS

CUSTOMER APPROVAL	
SIGNATURE	DATE
PLEASE SIGN AND RETURN	

Designer	SUGLIANI R.	Date 2018-03-23	Tollerance ±0.3	Units: mm	Series M8	Drawing n. 1-1
Approved	CIMMINO L.	Date 2018-03-23	Scale 2:1	Size: A4	Customer code:	

A4

HTP™ High Tech Products S.R.L.

DESCRIPTION
CIRCULAR CONNECTOR M8 FIELD ATTACHABLE,MALE,
STRAIGHT 180°,4POLES, EXIT CABLE FROM ø3,5mm TO ø5,5mm
CONNECTOR WITH H.T.P.LOGO

H.T.P.PART NUMBER
08MC4000-S-SK

H.T.P. High Tech Products S.R.L. Via Lesina,45 -24030- Brembate di Sopra (Bg) - ITALY Phone:+39.035692509 Fax:+39.035203291 E-mail: info@webhtp.eu Web: http://www.webhtp.eu/

ALL RIGHTS ARE RESERVED.