DATE	REV.	DESCRIPTION	NAME
13.10.2014	01	On the connector housing must be changed the silk print and the ATEX logo. On the label of the plastic bag must be changed the silk print and the ATEX logo. See the drawing	LORENZO CIMMINO
24.07.2017	02	On the connector housing must be changed the silk print and the ATEX logo. On the label of the plastic bag must be changed the silk print and the ATEX logo. See the drawing	ROBERTO SUGLIANI
07.08.2018	03	On the ATEX label and on the operating instructions must be added MADE IN CHINA.	ROBERTO SUGLIANI

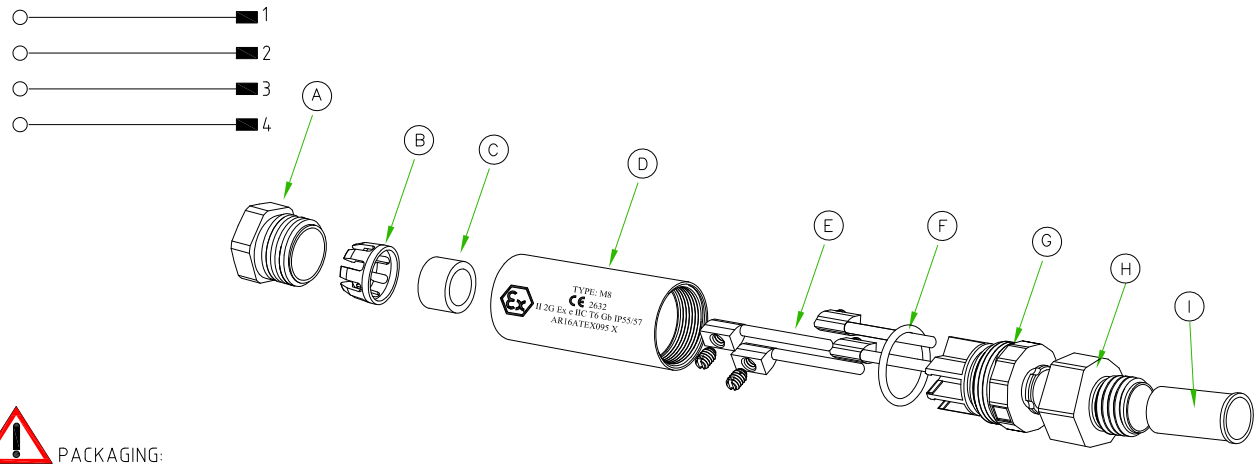

CONNECTOR FEATURES		
	PRODUCT TYPE	M8 FIELD ATTACHABLE
	CONTACT TYPE	SCREW MALE
	NUMBER OF CONTACTS	4POLES
	HOUSING MATERIAL	PA66 -CM3004V0
	HOUSING TYPE	180°
	HOUSING COLOUR	BLACK
	RATED VOLTAGE	30V AC/DC
	RATED CURRENT	4A
	COUPLING NUT MATERIAL	Brass+nickel plated (CuZnNi)
	O"RING	NBR
	CONNECTOR WITH H.T.P.LOGO	

THIS CODE IS SPECIAL BECAUSE IS THE ATEX CONNECTORS MAIN REFERENCE NORM:ATEX 2014/34/EU
MATERIAL PA66 - CM3004V0 (Material:V0 UL/CSA), FOR ALL COMPONENT OF THE CONNECTOR

PACKAGING:
SINGLY PACKED IN THE PLASTIC BAG
IN THE PLASTIC BAG MUST BE INSERTED THE
NEW OPERATING INSTRUCTION FOR CIRCULAR CONNECTORS.

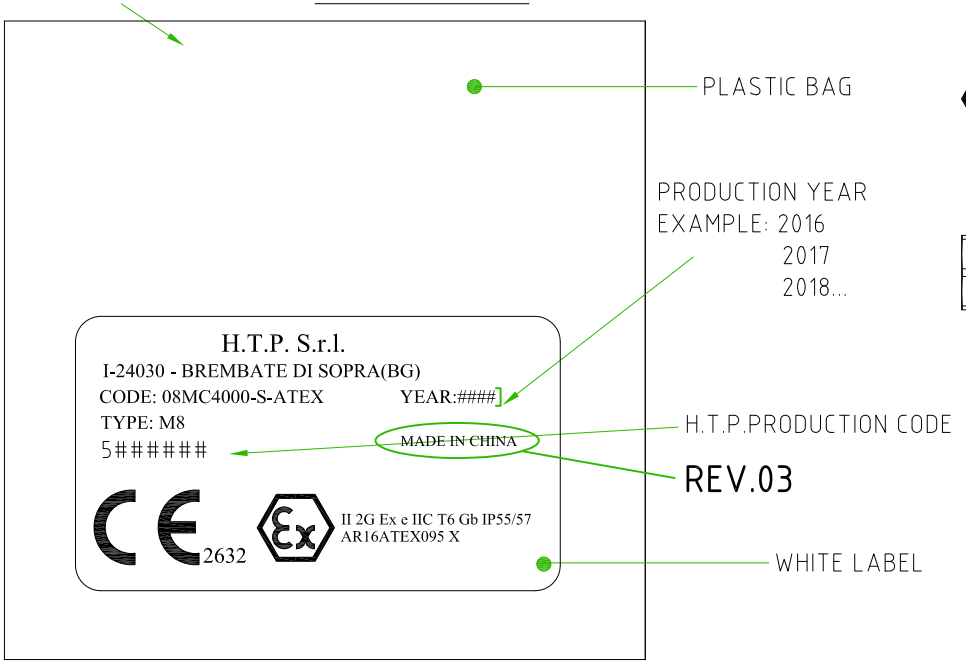

PAY ATTENTION: REV. 02

TYPE: M8
CE 2632
II 2G Ex e IIC T6 Gb IP55/57
AR16ATEX095 X

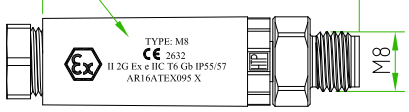

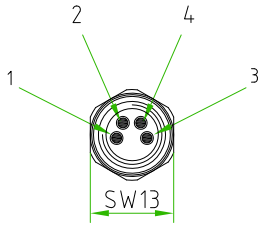

A	PRESS CABLE SREW
B	LAMELLAE PRESS-CABLE SEAL
C	GASKET PRESS-CABLE SEAL
D	HOUSING BLACK
E	SCREW CONTACT GOLD PLATED
F	O-RING
G	INTERNAL CORE M8
H	M8 NUT Brass+nickel plated (CuZnNi)
I	COPPER DUCT

TOLLERANZE ±0.2	DISEGNATORE LORENZO CIMMINO	DATA 23.05.14	SCALA 1:1		DISEGNO N. 1/2
U.d.M / ANGOLO	CONTROLLATO				
DESCRIZIONE: M8 MALE STRAIGHT 180°,4 POLES,WITH H.T.P.LOGO, BLACK HOUSING,FIELD ATTACHABLE WITH SCREW CONTACT. CONNECTOR MAIN REFERENCE NORM ATEX2014/34/EU		TIPO: M8		MATERIALE	
High Tech Products HTP H.T.P. HIGH TECH PRODUCTS		CODICE: 08MC4000-S-ATEX			

DATE	REV.	DESCRIPTION	NAME
13.10.2014	01	On the connector housing must be changed the silk print and the ATEX logo. On the label of the plastic bag must be changed the silk print and the ATEX logo. See the drawing	LORENZO CIMMINO
24.07.2017	02	On the connector housing must be changed the silk print and the ATEX logo. On the label of the plastic bag must be changed the silk print and the ATEX logo. See the drawing	ROBERTO SUGLIANI
07.08.2018	03	On the ATEX label and on the operating instructions must be added MADE IN CHINA.	ROBERTO SUGLIANI

REV. 02

back side

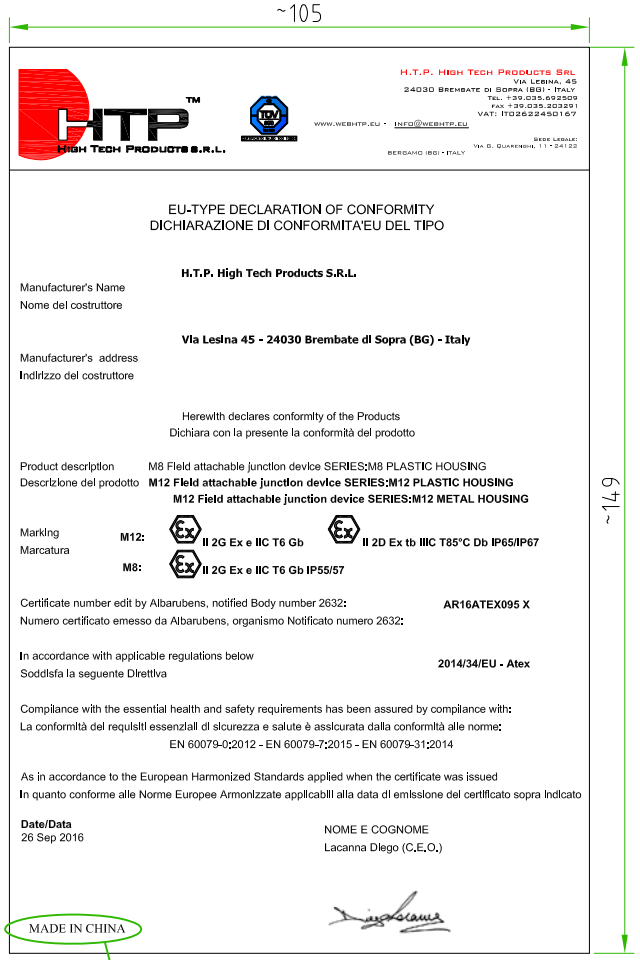

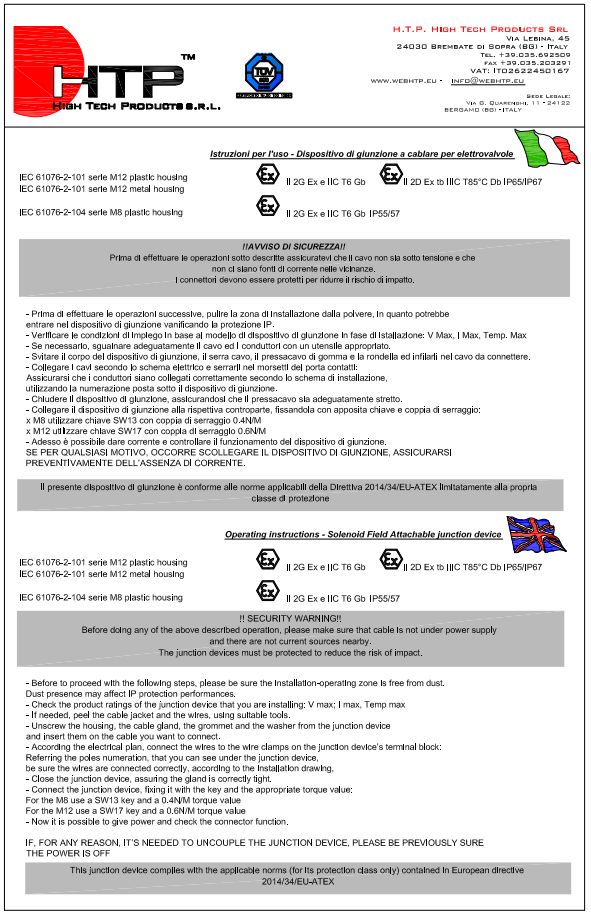

TOLLERANZE		DISEGNATORE	DATA	SCALA		DISEGNO N.
±0.2		LORENZO CIMMINO	23.05.14	1:1		2/2
U.d.M	ANGOLO	CONTROLLATO				

DESCRIZIONE	TIPO	MATERIALE
M8 MALE STRAIGHT 180°,4 POLES,WITH H.T.P.LOGO, BLACK HOUSING,FIELD ATTACHABLE WITH SCREW CONTACT. CONNECTOR MAIN REFERENCE NORM ATEX2014/34/EU	M8	

High Tech Products HTP H.T.P. HIGH TECH PRODUCTS

CODICE: 08MC4000-S-ATEX