| DATE | REV. | DESCRIPTION | NAME |
|---|---|---|---|
| 07.08.2018 | 01 | On the ATEX label and on the operating instructions must be added MADE IN CHINA. | ROBERTO SUGLIANI |

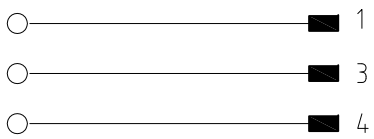


| CONNECTOR FEATURES | |
|---|---|
| PRODUCT TYPE | M8 FIELD ATTACHABLE |
| CONTACT TYPE | MALE TO SOLDER |
| NUMBER OF CONTACTS | 3POLES |
| HOUSING MATERIAL | PA66 -CM3004V0 |
| HOUSING TYPE | 180° |
| HOUSING COLOUR | BLACK |
| RATED VOLTAGE | 50V AC / 60 V DC |
| RATED CURRENT | 3A |
| COUPLING NUT MATERIAL | Brass+nickel plated (CuZnNi) |
| O"RING | NBR |
| CONNECTOR WITH H.T.P.LOGO | |

THIS CODE IS SPECIAL BECAUSE IS THE ATEX CONNECTORS MAIN REFERENCE NORM:ATEX 2014/34/EU
MATERIAL PA66 - CM3004V0 (Material:V0 UL/CSA), FOR ALL COMPONENT OF THE CONNECTOR

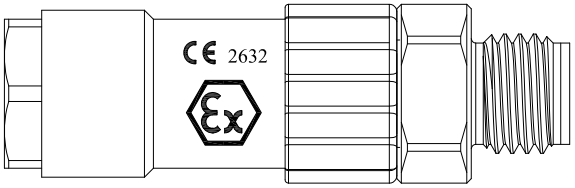


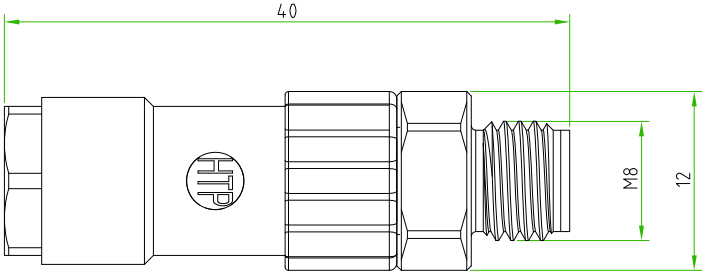


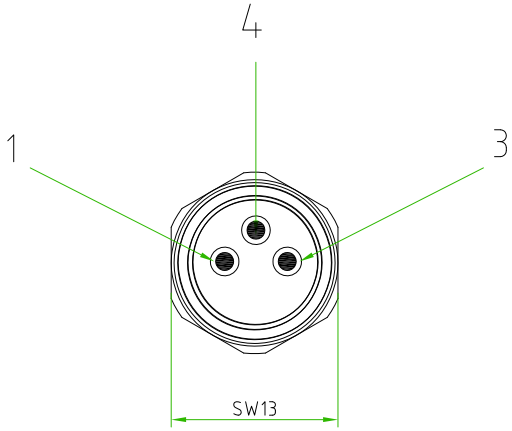


PACKAGING:
SINGLY PACKED IN THE PLASTIC BAG
IN THE PLASTIC BAG MUST BE INSERTED THE NEW OPERATING INSTRUCTION FOR CIRCULAR CONNECTORS.

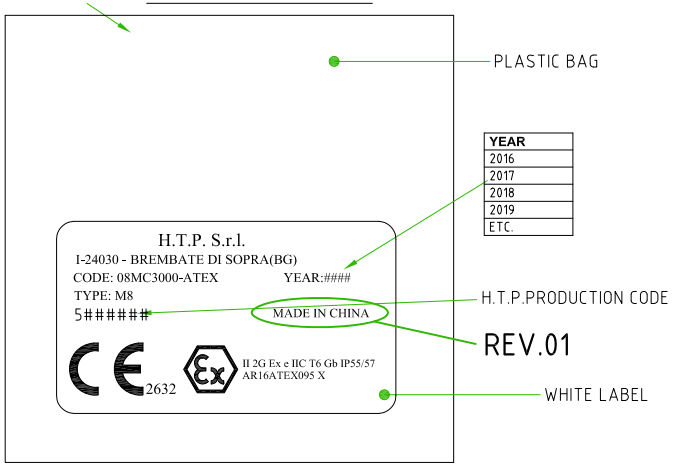


| TOLLERANZE | | DISEGNATORE | DATA | SCALA | | DISEGNO N. |
|---|---|---|---|---|---|---|
| ±0.2 | | ROBERTO SUGLIANI | 23.04.2018 | 2:1 | | 1/2 |
| U.d.M | ANGOLO | CONTROLLATO | | | | |

| DESCRIZIONE | TIPO | MATERIALE |
|---|---|---|
| M8 MALE STRAIGHT 180°,3 POLES,WITH H.T.P.LOGO, BLACK HOUSING,FIELD ATTACHABLE WITH TO SOLDER CONTACTS. CONNECTOR MAIN REFERENCE NORM:ATEX 2014/34/EU | M8 | |

High Tech Products HTP H.T.P. HIGH TECH PRODUCTS

CODICE 08MC3000—ATEX

| DATE | REV. | DESCRIPTION | NAME |
|---|---|---|---|
| 07.08.2018 | 01 | On the ATEX label and on the operating instructions must be added MADE IN CHINA. | ROBERTO SUGLIANI |

frontal side

back side

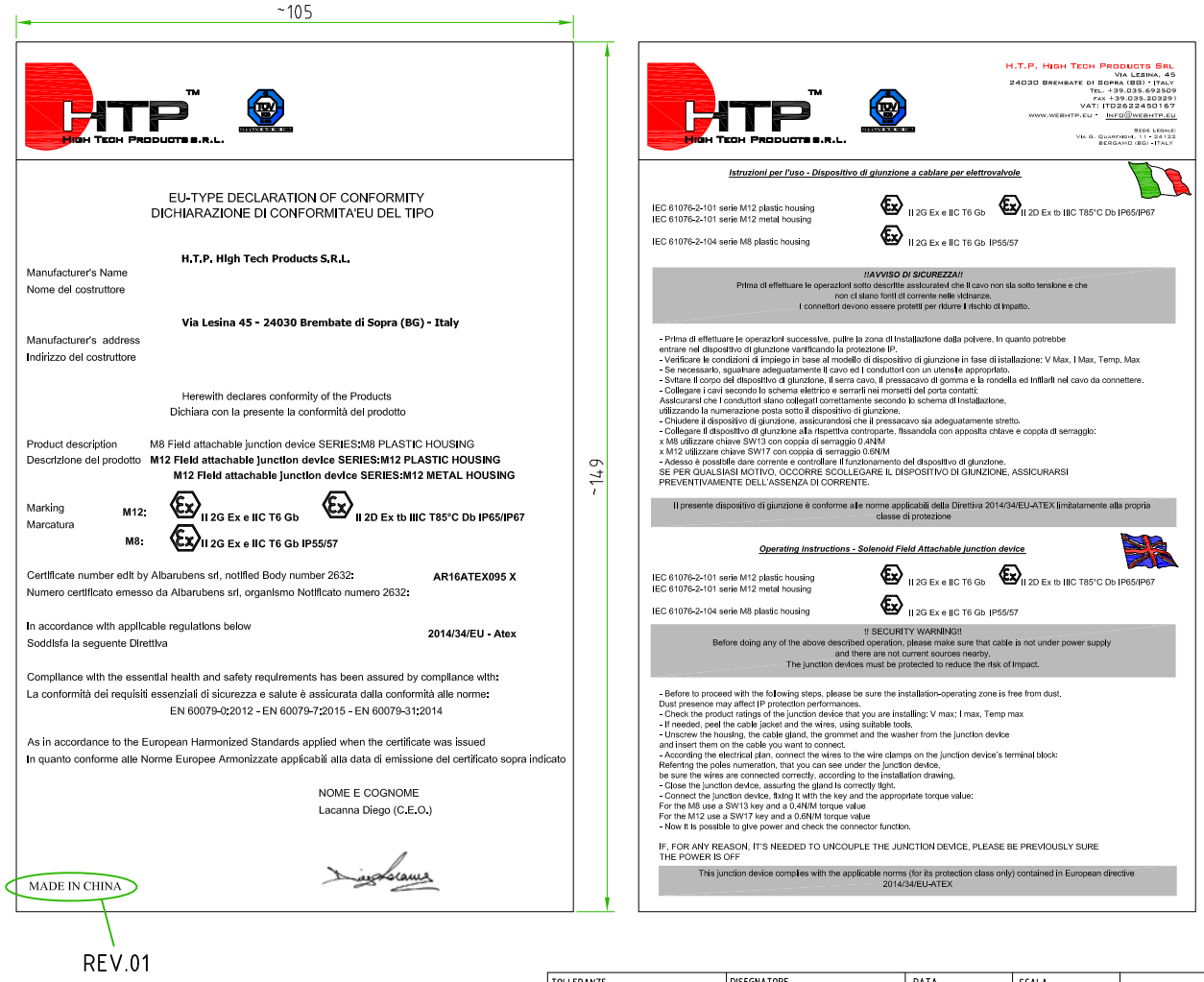


| TOLLERANZE | | DISEGNATORE | DATA | SCALA | | DISEGNO N. |
|---|---|---|---|---|---|---|
| ±0.2 | | ROBERTO SUGLIANI | 23.04.2018 | 2:1 | | 2/2 |
| U.d.M | ANGOLO | CONTROLLATO | | | | |

| DESCRIZIONE | TIPO | MATERIALE |
|---|---|---|
| M8 MALE STRAIGHT 180°,3 POLES,WITH H.T.P.LOGO, BLACK HOUSING,FIELD ATTACHABLE WITH TO SOLDER CONTACTS. CONNECTOR MAIN REFERENCE NORM:ATEX 2014/34/EU | M8 | |

High Tech Products HTP H.T.P. HIGH TECH PRODUCTS

CODICE 08MC3000—ATEX