Rev.	Modify	Date	Signed	Approved

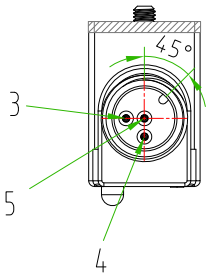

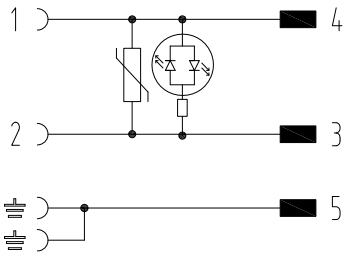

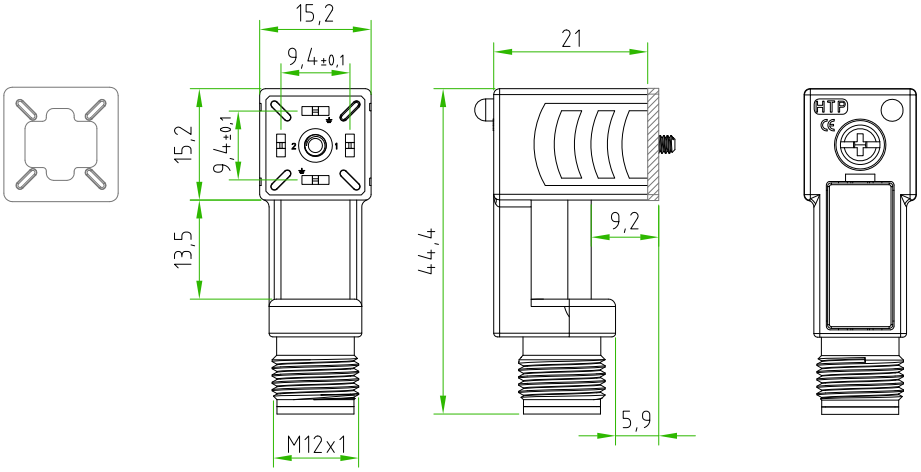

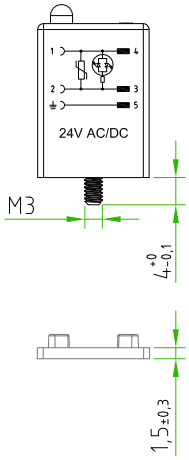

	PRODUCT TYPE	ADAPTER SQUARE MICRO CONNECTOR EN175301-803 (TYPE C) + M12 CIRCULAR CONNECTOR
ADAPTER CONNECTOR FEATURES	CONNECTOR TYPE	SQUARE MICRO CONNECTOR EN175301-803(TYPE C)
	CONNECTOR COLOUR	BLACK
	CONTACTS SPACING	9,4mm
	NUMBER OF CONTACTS	2POLES+2EARTHS
	EARTH POSITIONING	H.6-12
	CENTRAL FIXING SCREW	M3X0,5 L=22,5mm
	GASKET TYPE	INTEGRATED (NBR)
	PROTECTION CLASS	IP67
	CIRCUIT TYPE	WITH BIPOLAR RED LED+VARISTOR
	RATED VOLTAGE	24V AC/DC
	M12 CONNECTOR TYPE	STRAIGHT 180°
	M12 CONTACTS TYPE	MALE 3POLES
	M12 CONTACTS CONNECTED	N°3
	CONNECTOR WITH H.T.P.LOGO	

CUSTOMER APPROVAL	
SIGNATURE	DATE
PLEASE SIGN AND RETURN	

Designer SUGLIANI R.	Date 2018-04-03	Tollerance ±0.3	Units: mm	Series ADAPTER	Drawing n. 1-1
Approved CIMMINO L.	Date 2018-04-03	Scale 1:1	Size: A4	Customer code:	

A4

HTP High Tech Products S.R.L.

DESCRIPTION

ADAPTER SQUARE MICRO CONNECTOR EN175301-803 (type-C),2P.+P.E.,8mm, BLACK,WITH BIPOLAR RED LED+VARISTOR 24V,+M12 CONNECTOR MALE 3POLES. CONNECTOR WITH H.T.P.LOGO

H.T.P.PART NUMBER

P2N02VL1C-12MD

H.T.P. High Tech Products S.R.L. Via Lesina,45 -24030- Brembate di Sopra (Bg) - ITALY Phone:+39.035692509 Fax:+39.035203291 E-mail: info@webhtp.eu Web: http://www.webhtp.eu/

ALL RIGHTS ARE RESERVED.