

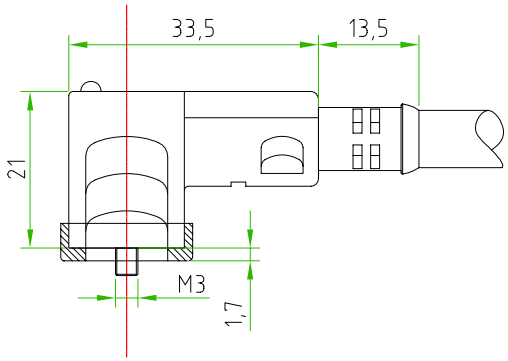

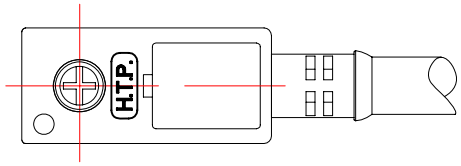

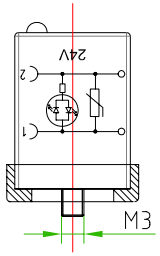

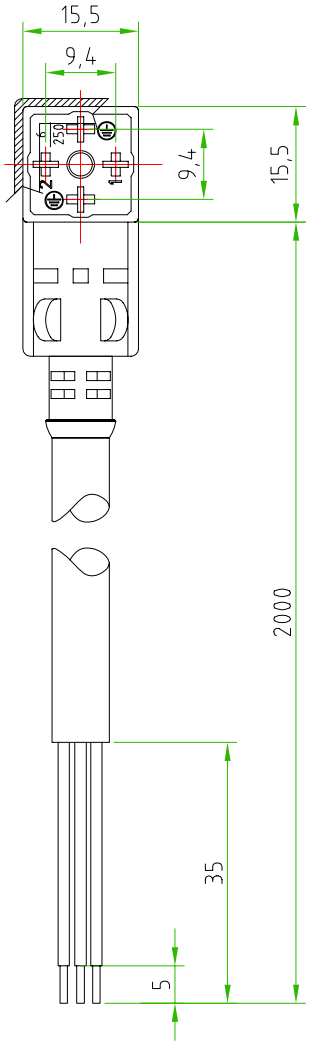

CONNECTOR FEATURES	PRODUCT TYPE	CP2 SERIES
	HOUSING COLOUR	BLACK
	CONTACT TYPE	2POLES+EARTH
	CONTACT SPACING	9,4mm
	CABLE LENGHT	2000mm
	PROTECTION CLASS	IP67
	STRIPPING	35mm STANDARD
	PEELING AND TINNING	5mm STANDARD
	FIXING SCREW	M3X21,5
	PROFILED GASKET	NBR
	EARTH H	6/12
	VOLTAGE	24V AC/DC
	CONNECTOR WITH YELLOW LED + VARISTOR	
CABLE FEATURES	H.T.P. CABLE CODE	04
	NUMBER OF CONDUCTORS	N°3
	CONDUCTOR SECTION	0.5mm²
	CABLE MATERIAL	PVC CEI2022II0R
	CABLE COLOUR	GREY
	CONDUCTOR INSULATION MATERIAL	PVC

TOLLERANZE		DISEGNATORE LORENZO CIMMINO	DATA 16-06-11	SCALA 1 : 1	DISEGNO N.
U.d.M	ANGOLO	CONTROLLATO			
DESCRIZIONE DIN43650/C,2POLES+EARTH(H.6/12),WITH YELLOW LED+VDR, 24V,WITH CABLE PVC/PVC CEI2022II0R,3X0.5mm²,GREY,L=2m			TIPO CP2		MATERIALE
High Tech Products HTP H.T.P. HIGH TECH PRODUCTS			CODICE CP2N02VG1C042		