


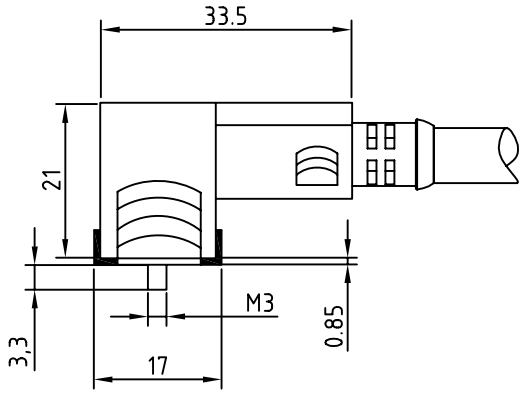


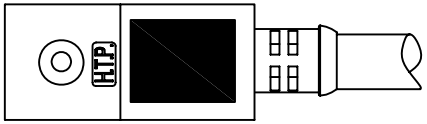


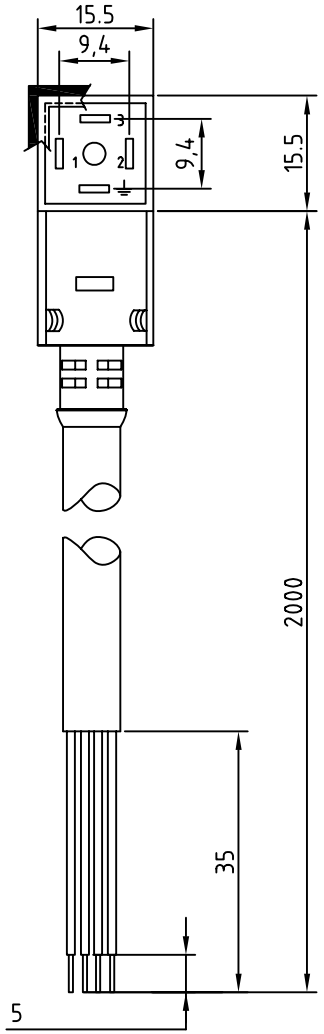


| | | |
|---|---|---|
| CONNECTOR FEATURES | CONNECTOR TYPE | DIN43650/C |
| | CONTACT TYPE | 3POLES+EARTH |
| | CONTACT SPACING | 9,4mm |
| | CABLE LENGHT | 2000mm |
| | PROTECTION CLASS | IP67 |
| | STRIPPING | 35mm STANDARD |
| | PEELING AND TINNING | 5mm STANDARD |
| | FIXING SCREW | M3X21,5 |
| | PROFILED GASKET | NBR |
| | EARTH H | 6 |
| | CONNECTOR WITHOUT ELECTRONIC | |
| CABLE FEATURES | H.T.P. CABLE CODE | B1 |
| | NUMBER OF CONDUCTORS | N°4 |
| | CONSUCTOR SECTION | 0.5mm² |
| | CABLE MATERIAL | PVC H03VVF |
| | CABLE COLOUR | BLACK |
| | CONDUCTOR INSULATION MATERIAL | PVC |

| | | | | | |
|---|---|---|---|---|---|
| TOLLERANZE | | DISEGNATORE: LORENZO CIMMINO | DATA: 26-02-10 | SCALA: 1 : 1 | DISEGNO N. |
| U.d.M | ANGOLO | CONTROLLATO | | | |

DESCRIZIONE: DIN43650/C,3POLES+EARTH(H.6),WITHOUT ELECTRONIC , WITH CABLE PVC/PVC,H03VVF,4X0.5mm²,BLACK,L=2m

TIPO: CP2

MATERIALE:

H.T.P. HIGH TECH PRODUCTS

CODICE: CP2N03000AB12