Rev.	Modify	Date	Firma	Approved

Rev.	Modify	Date	Firma	Approved

Rev.	Modify	Date	Signed	Approved

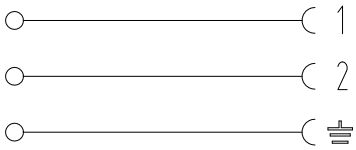

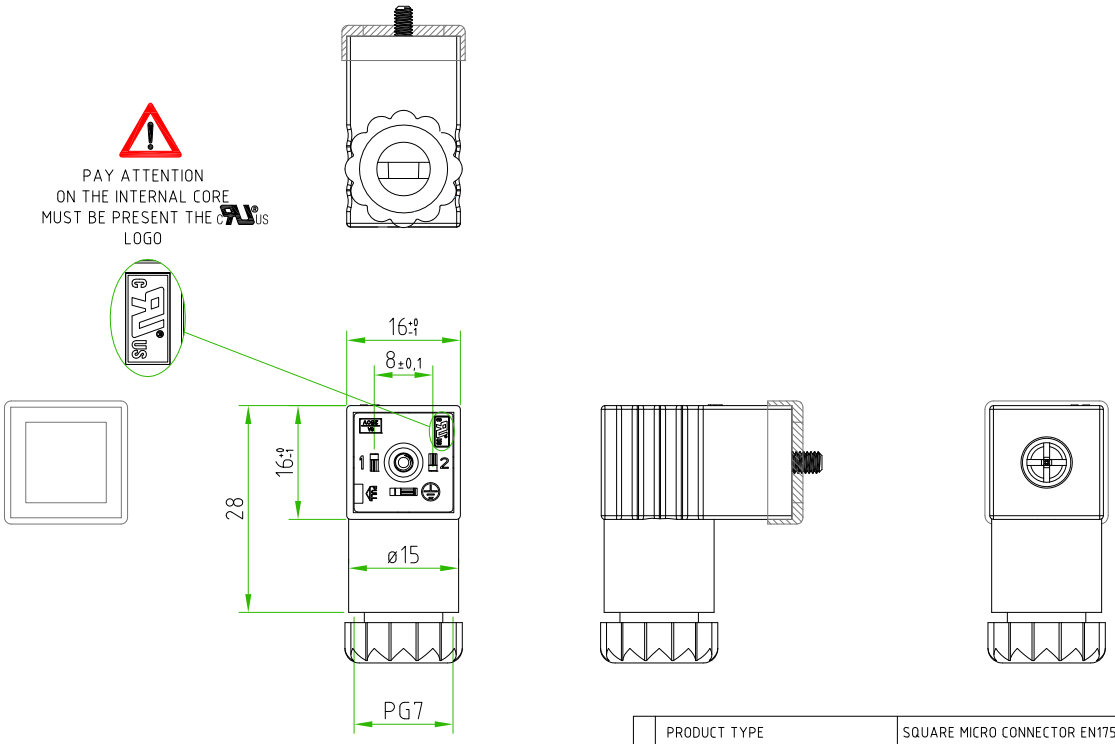

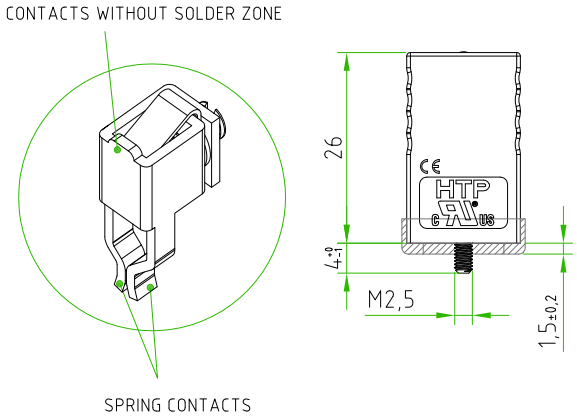

CONNECTOR FEATURES		
	PRODUCT TYPE	SQUARE MICRO CONNECTOR EN175301-803 FORM C FIELD ATTACHABLE UL APPROVED.
	UL NUMBER CERTIFICATE	E333724
	HOUSING MATERIAL/COLOUR	PA66-BASFC3U /BLACK
	PRESS-CABLE MATERIAL/COLOUR	PA66-BASFC3U /BLACK
	INTERNAL CORE MATERIAL/COLOUR	PA66-BASFC3U /BLACK
	HEIGHT HOUSING	26mm
	CONTACTS SPACING	8mm
	CONTACTS TYPE	SCREW CONTACTS(with protection plate)
	NUMBER OF POLES	2POLES+EARTH
	EARTH POSITIONING	H.6 (TURNABLE)
	CABLE EXIT	PG7
	SUITABLE CABLE	FROM ø3,5mm TO ø6mm
	MAX.CONDUCTOR SIZE	0,75mm²
	PROTECTION CLASS	IP67
	CIRCUIT TYPE	WITHOUT ELECTRONIC
	RATED VOLTAGE	250V AC / 300V DC
	CONNECTOR TEMPERATURE RANGE	from -40°C to +90°C
	GASKET TYPE	PROFILED NBR
	FIXING SCREW	M2.5X0.5 L=28mm
	CONNECTOR WITH H.T.P. AND LOGO	

CUSTOMER APPROVAL	
SIGNATURE	DATE
PLEASE SIGN AND RETURN	

A4

Designer	SUGLIANI R.	Date	2020-02-28	Tollerance	±0,3	Units:	mm	Series	EN175301-803 (form C)	Drawing n.
Approved	CIMMINO L.	Date	2020-02-28	Scale	1:1	Size:	A4	Customer code:		1-2

HTP High Tech Products S.R.L.

DESCRIPTION

SQUARE MICRO CONNECTOR EN175301-803 (form C),FIELD ATTACHABLE,2P.+PE, APPROVED WITHOUT ELECTRONIC 250V AC/ 300V DC,BLACK HOUSING, PG7. CONNECTOR WITH H.T.P. AND LOGO.

H.T.P.PART NUMBER

P1NZ2000-UL90

H.T.P. High Tech Products S.R.L. Via Lesina,45 -24030- Brembate di Sopra (Bg) - ITALY Phone:+39.035692509 Fax:+39.035203291 E-mail: info@webhtp.eu Web: http://www.webhtp.eu/

ALL RIGHTS ARE RESERVED.

Rev.	Modify	Date	Firma	Approved

PACKAGING:
INSERT N°100 PCS IN A LITTLE CARTON BOX.
INSERT N°10 LITTLE CARTON BOXES IN A BIG BOX 36,9x26.3x36.5CM.
ON EACH CARTON BOX (INTERNAL/EXTERNAL) MUST BE APPLIED
THE UL LABLE

UL LABEL

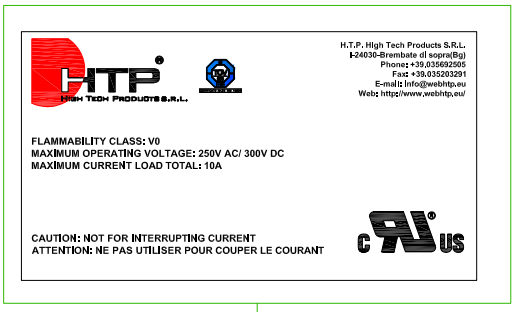

BOXES FEATURES

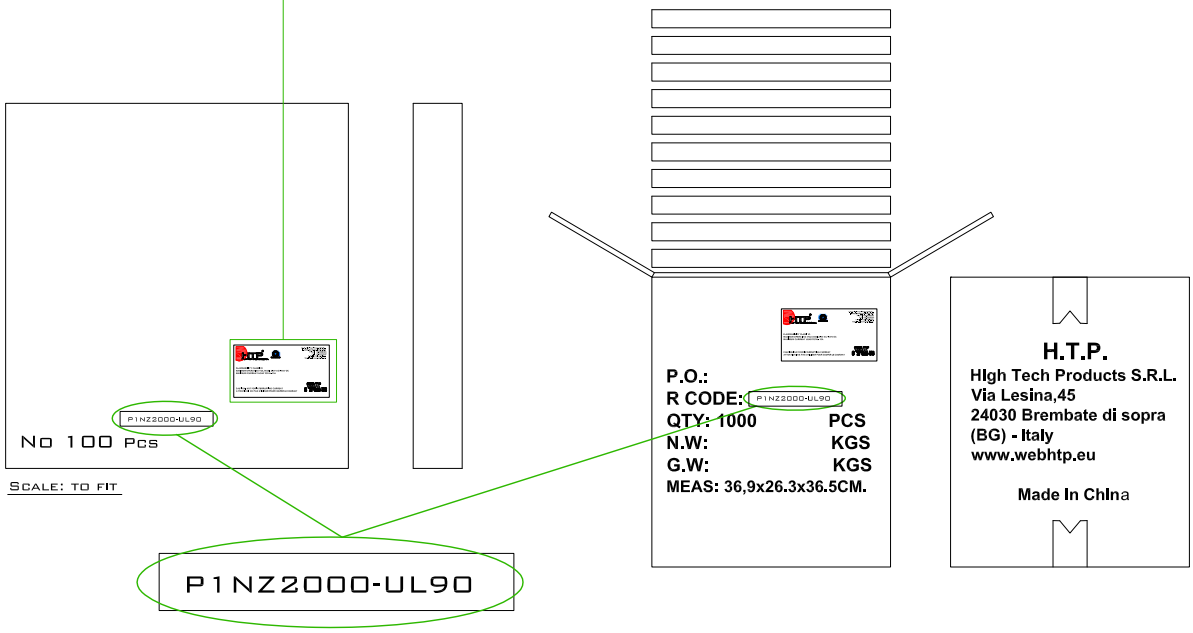

Designer	SUGLIANI R.	Date	2020-02-28	Tollerance ±0,3	Units: mm	Series EN175301-803 (form C)	Drawing n. 2-2
Approved	CIMMINO L.	Date	2020-02-28	Scale 1:1	Size: A4	Customer code:	

A4

DESCRIPTION

SQUARE MICRO CONNECTOR EN175301-803 (form C),FIELD ATTACHABLE,2P.+PE, cULus APPROVED WITHOUT ELECTRONIC 250V AC/ 300V DC,BLACK HOUSING, PG7. CONNECTOR WITH H.T.P. AND cULus LOGO.

H.T.P.PART NUMBER

P1NZ2000-UL90

ALL RIGHTS ARE RESERVED.