

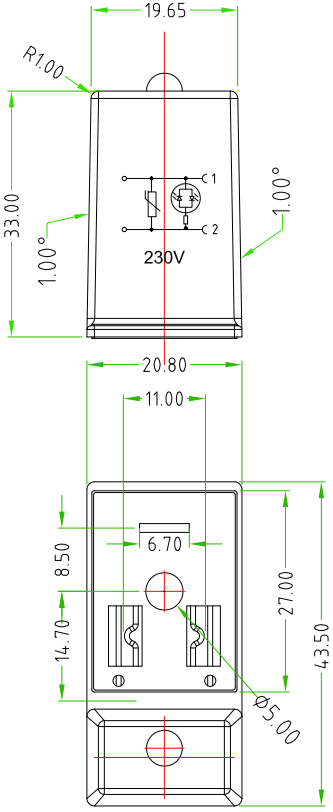

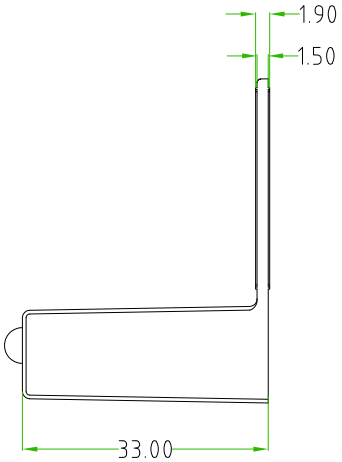

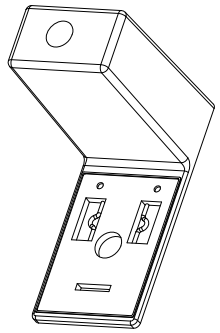

CONNECTOR FEATURES		
	PRODUCT TYPE	DIN43650/B ADAPTOR ANGLED 90°
	HOUSING COLOUR	BLACK
	CONTACT SPACING	11mm
	NUMBER OF POLES	2POLES+EARTH
	EARTH POSITIONING	H.6
	CIRCUIT TYPE	RED LED + VARISTOR
	VOLTAGE	230V AC/DC
	PACKAGING:SINGLY PACKED IN THE PLASTIC BAG WITHOUT ANY LABEL	

TOLLERANZE ±±0.3	DISEGNATORE ROBERTO SUGLIANI	DATA 06.03.2019	SCALA 1 : 1		DISEGNO N.
U.d.M / ANGOLO	CONTROLLATO				
DESCRIZIONE ADAPTOR FOR DIN43650/B,ANGLED 90?2POLES+EARTH(H.6) WITH RED LED+VARISTOR,230V.		TIPO ADAPTORS			MATERIALE
High Tech Products HTP H.T.P. HIGH TECH PRODUCTS		CODICE AM1N02VL3A			