

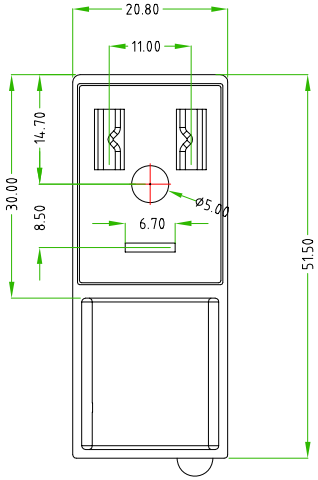

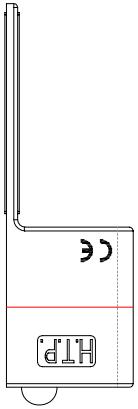

CONNECTOR FEATURES		
	PRODUCT TYPE	DIN43650/B ADAPTOR STRAIGHT 180°
	HOUSING COLOUR	BLACK
	CONTACT SPACING	11mm
	NUMBER OF POLES	2POLES+EARTH
	EARTH POSITIONING	H.6
	CIRCUIT TYPE	RED LED + VARISTOR
	VOLTAGE	24V AC/DC
	ADAPTER WITH H.T.P.LOGO	
	PACKAGING:SINGLY PACKED IN THE PLASTIC BAG WITHOUT ANY LABEL	

TOLLERANZE ±0.3		DISEGNATORE LORENZO CIMMINO	DATA 09-09-13	SCALA 1 : 1		DISEGNO N.
U.d.M	ANGOLO	CONTROLLATO				
DESCRIZIONE ADAPTER FOR DIN43650/B,STRAIGHT 180,2POLES+EARTH(H.6) WITH RED LED+VARISTOR,24V. ADAPTER WITH H.T.P.LOGO			TIPO ADAPTORS			MATERIALE
H.T.P. HIGH TECH PRODUCTS			CODICE AM1N02VL1A-180			