

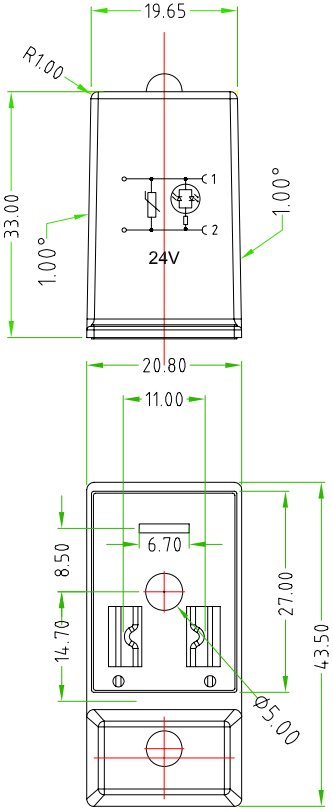

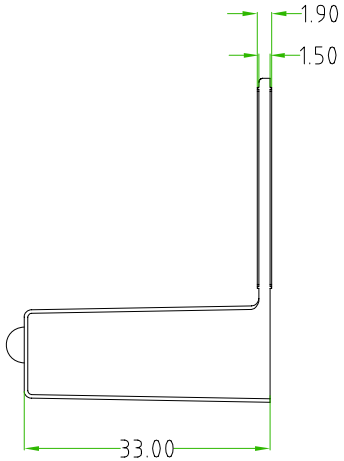

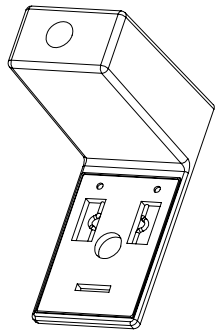

CONNECTOR FEATURES		
	PRODUCT TYPE	DIN43650/B ADAPTOR ANGLED 90°
	HOUSING COLOUR	BLACK
	CONTACT SPACING	11mm
	NUMBER OF POLES	2POLES+EARTH
	EARTH POSITIONING	H.6
	CIRCUIT TYPE	RED LED + VARISTOR
	VOLTAGE	24V AC/DC
	PACKAGING:SINGLY PACKED IN THE PLASTIC BAG WITHOUT ANY LABEL	

TOLLERANZE ±0.3	DISEGNATORE LORENZO CIMMINO	DATA 07-10-13	SCALA 1 : 1		DISEGNO N.
U.d.M / ANGOLO	CONTROLLATO				
DESCRIZIONE: ADAPTOR FOR DIN43650/B,ANGLED 90,2POLES+EARTH(H.6) WITH RED LED+VARISTOR,24V.		TIPO: ADAPTORS			MATERIALE
H.T.P. HIGH TECH PRODUCTS		CODICE: AM1N02VL1A			